Curs 6-7

2016/2017

Dispozitive şi circuite de microunde pentru radiocomunicații

Disciplina 2015/2016

- 2C/1L, **DCMR (CDM)**
- **Minim 7 prezente (curs+laborator)**
- Curs - **sl. Radu Damian**
  - Marti 18-20, P2
  - E – 50% din nota
  - probleme + (2p prez. curs)
    - 3prez.=+0.5p
  - **toate materialele permise**
- Laborator – **sl. Radu Damian**
  - Joi 8-14 impar II.13
  - L – 25% din nota
  - P – 25% din nota

Documentatie

- http://rf-opto.etti.tuiasi.ro

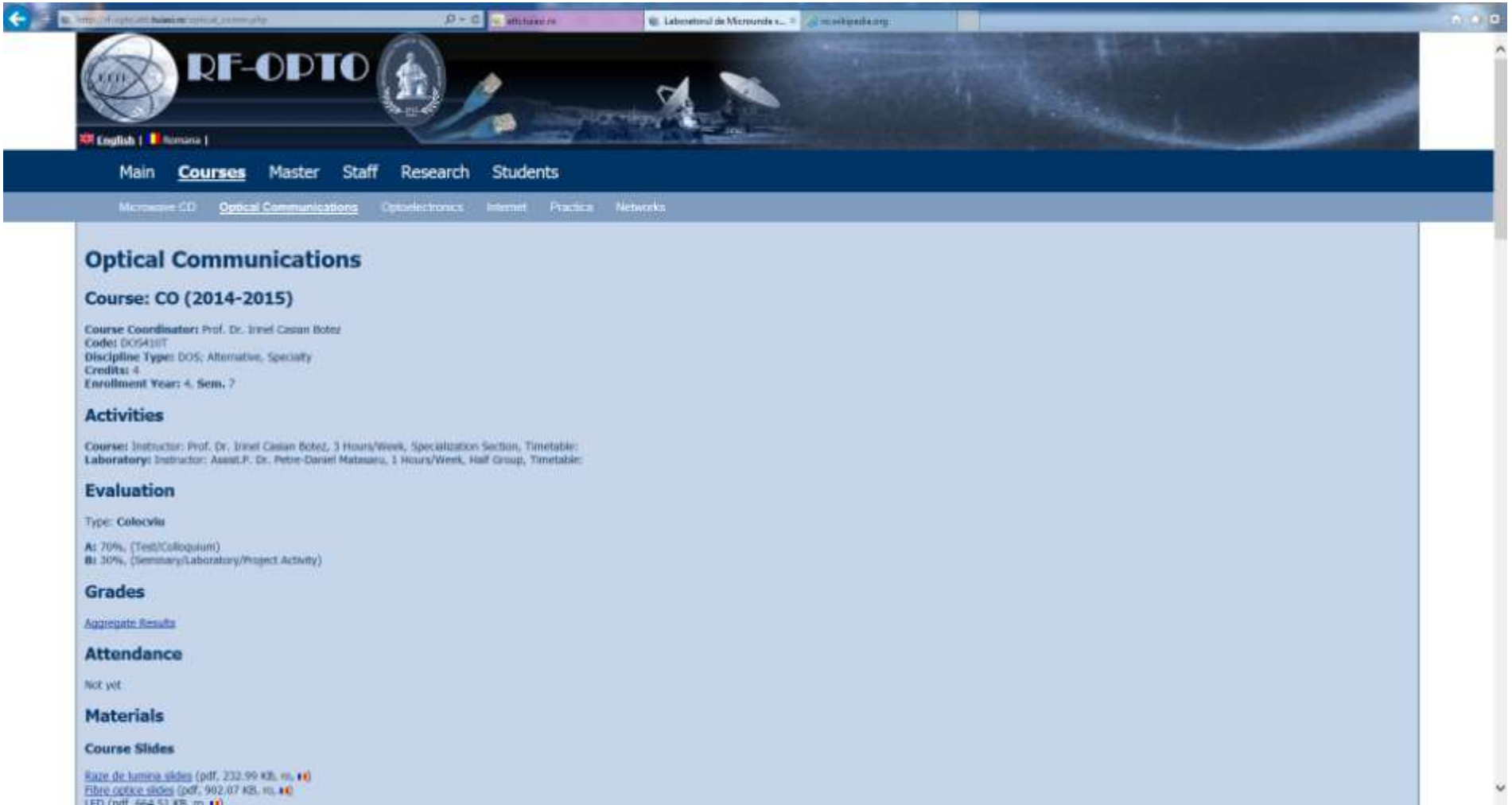

Documentatie

- RF-OPTO
  - http://rf-opto.etti.tuiasi.ro
- Fotografie
  - de trimis prin email: **rdamian@etti.tuiasi.ro**
  - necesara la laborator/curs
    - ~~<=C3, +1p~~
    - ~~<=C5, +0.5p~~

Fotografii

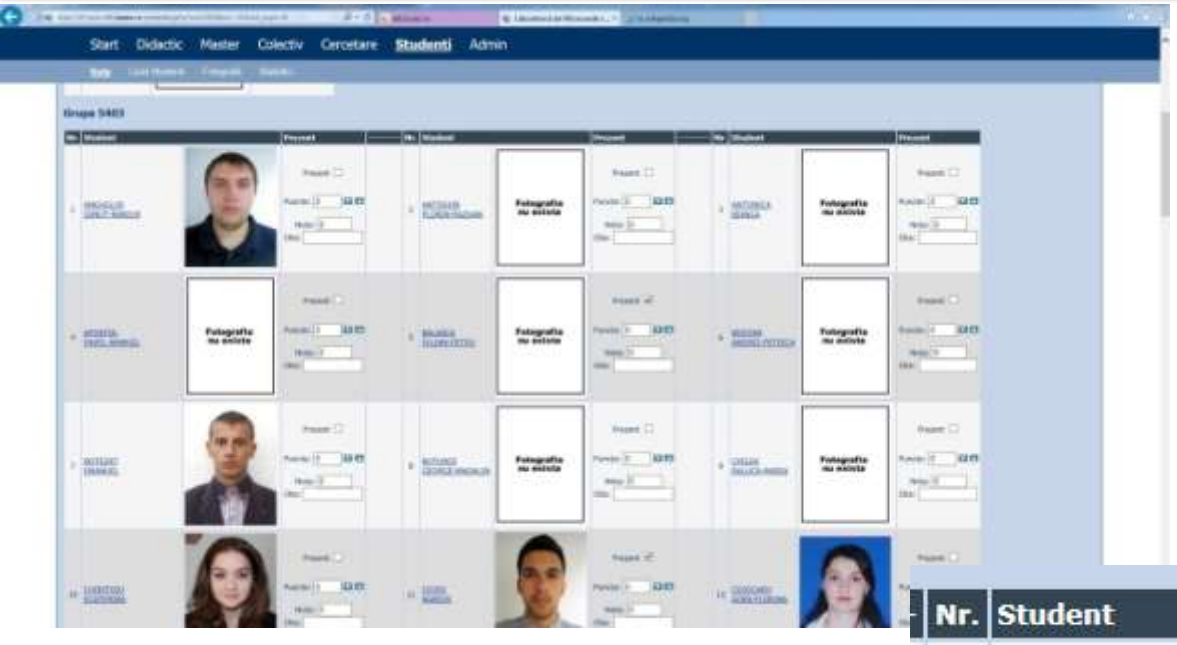

Nr.	Student		Prezent
2	ANTIGHIN FLORIN-RAZVAN	Fotografia nu exista	Prezent ☐ Puncte: 0 Nota: 0 Obs:

Acces

- ~~Personalizat~~

Date:

Grupa	5304 (2015/2016)
Specializarea	Tehnologii si sisteme de telecomunicatii
Marca	5184

Acceseaza ca acest student

Note obtinute

Disciplina	Tip	Data	Descriere	Nota	Puncte	Obs.
TW	Tehnologii Web					
	N	17/01/2014	Nota finala	10	-	
	A	17/01/2014	Colocviu Tehnologii Web 2013/2014	10	7.55	
	B	17/01/2014	Laborator Tehnologii Web 2013/2014	9	-	
	D	17/01/2014	Tema Tehnologii Web 2013/2014	9	-	

Nume

Email

Cod de verificare

344bd9f

Trimite

Reprezentare logaritmică

dB $= 10 \cdot \log_{10}(P_2 / P_1)$

0 dB	= 1
+ 0.1 dB	= 1.023 (+2.3%)
+ 3 dB	= 2
+ 5 dB	= 3
+ 10 dB	= 10
-3 dB	= 0.5
-10 dB	= 0.1
-20 dB	= 0.01
-30 dB	= 0.001

dBm $= 10 \cdot \log_{10}(P / 1\ mW)$

0 dBm	= 1 mW
3 dBm	= 2 mW
5 dBm	= 3 mW
10 dBm	= 10 mW
20 dBm	= 100 mW
-3 dBm	= 0.5 mW
-10 dBm	= 100 μW
-30 dBm	= 1 μW
-60 dBm	= 1 nW

[dBm] + [dB] = [dBm]

[dBm/Hz] + [dB] = [dBm/Hz]

[x] + [dB] = [x]

Recapitulare

Linii de transmisie in mod TEM

- mod TEM, doi conductori

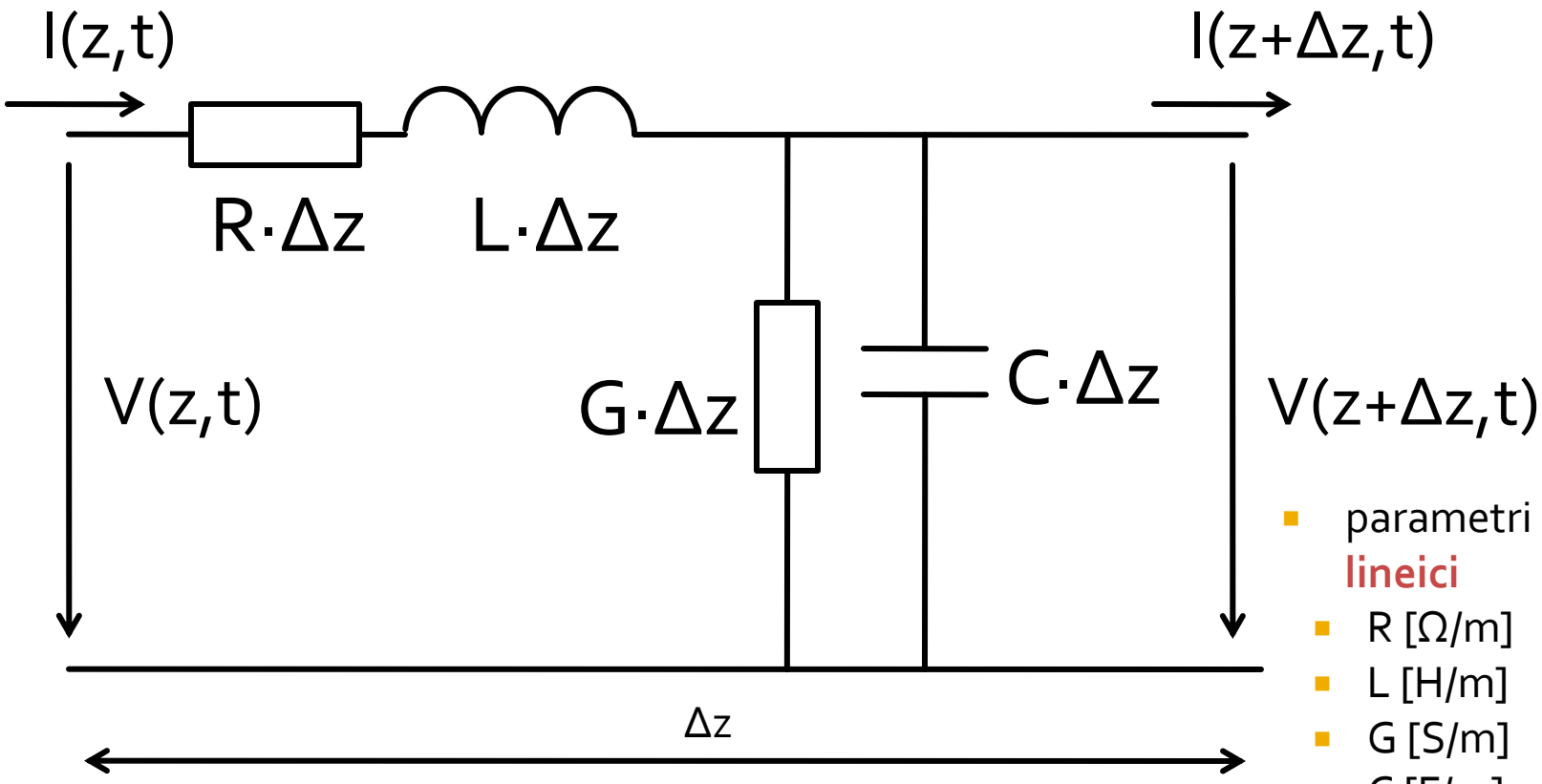

- parametri **lineici**
  - R [Ω/m]
  - L [H/m]
  - G [S/m]
  - C [F/m]

Linie fara pierderi

- impedanta la intrarea liniei de impedanta caracteristica Z_o, de lungime l, terminata cu impedanta Z_L

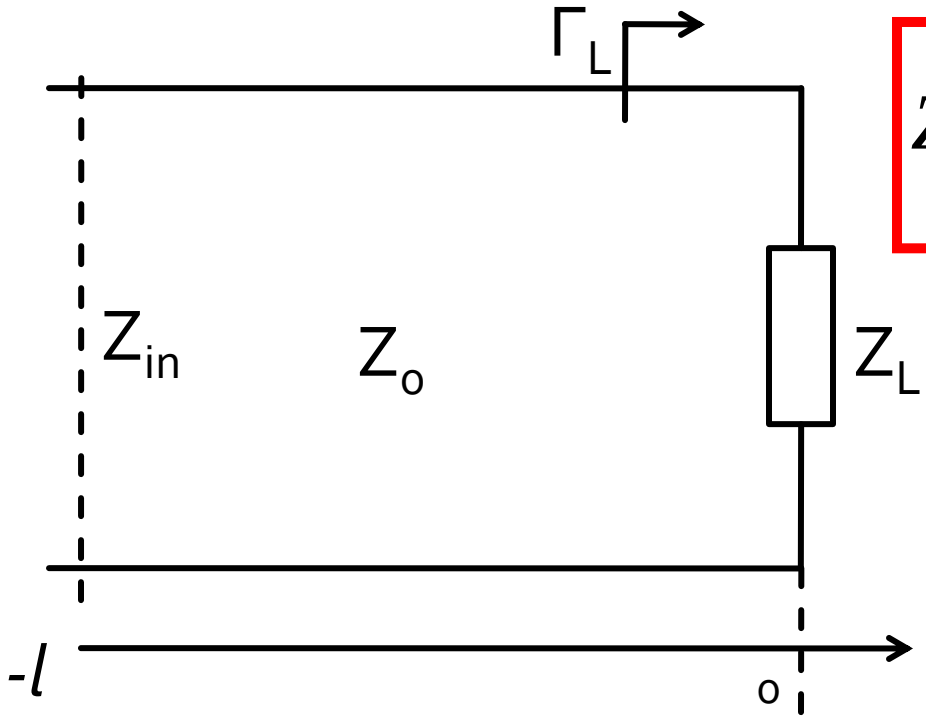

$$Z_{in} = Z_0 \cdot \frac{Z_L + j \cdot Z_0 \cdot \tan\beta \cdot l}{Z_0 + j \cdot Z_L \cdot \tan\beta \cdot l}$$

Analiza la nivel de bloc

- are ca scop separarea unui circuit complex in blocuri individuale
- acestea se analizeaza separat (decuplate de restul circuitului) si se caracterizeaza doar prin intermediul porturilor (**cutie neagra**)
- analiza la nivel de retea permite cuplarea rezultatelor individuale si obtinerea unui rezultat total pentru circuit

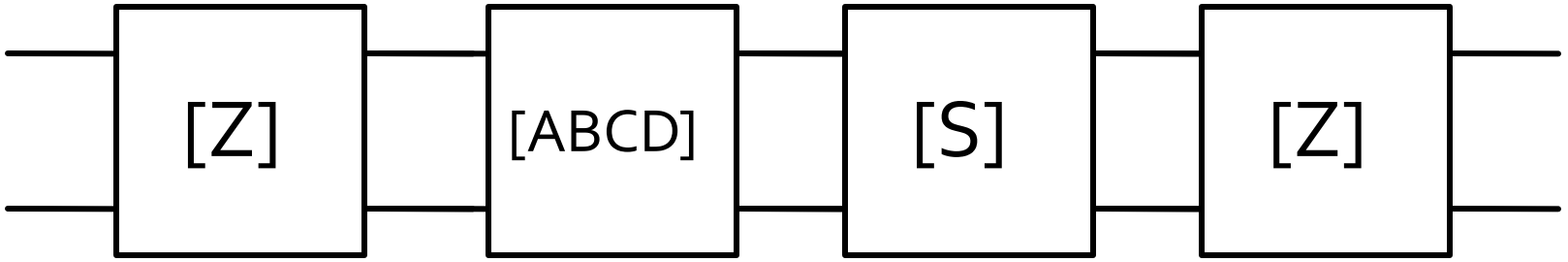

Matricea ABCD – de transmisie

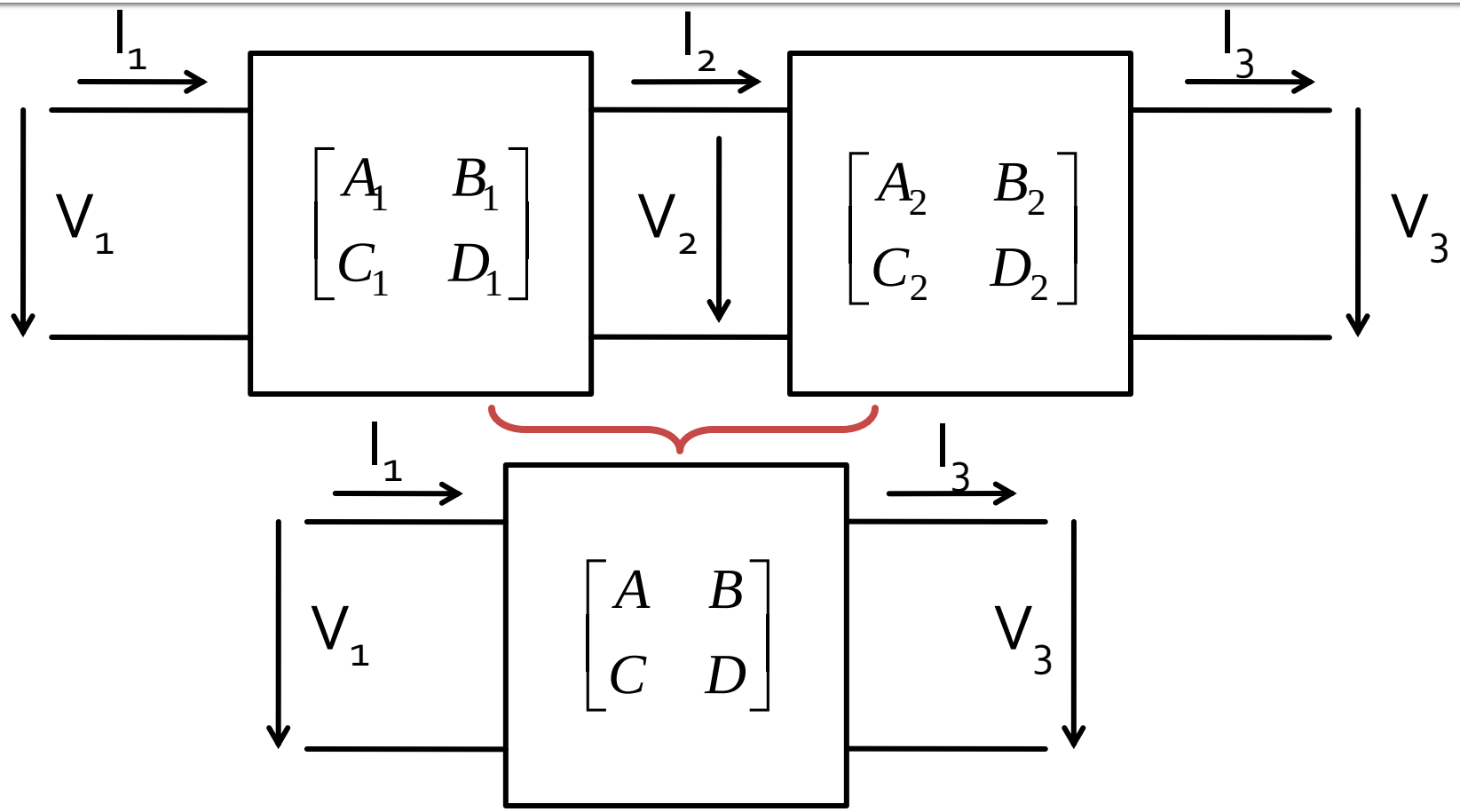

$$\begin{bmatrix} A & B \\ C & D \end{bmatrix} = \begin{bmatrix} A_1 & B_1 \\ C_1 & D_1 \end{bmatrix} \cdot \begin{bmatrix} A_2 & B_2 \\ C_2 & D_2 \end{bmatrix}$$

Matricea S (repartitie)

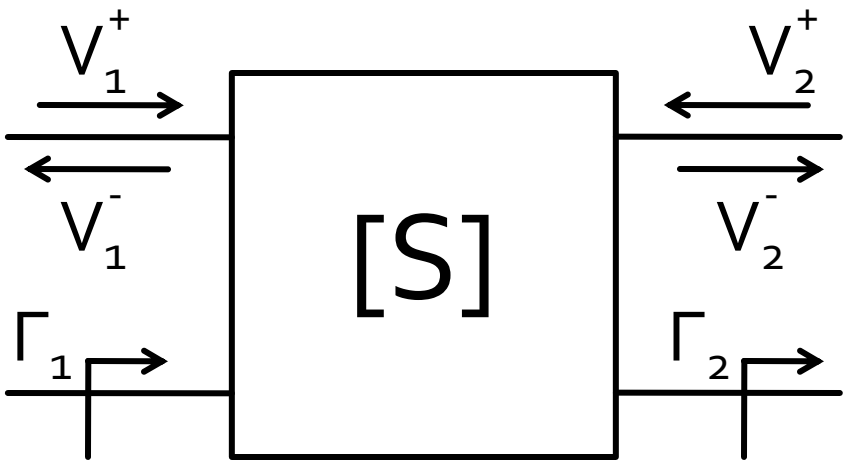

$$\begin{bmatrix} V_1^- \\ V_2^- \end{bmatrix} = \begin{bmatrix} S_{11} & S_{12} \\ S_{21} & S_{22} \end{bmatrix} \cdot \begin{bmatrix} V_1^+ \\ V_2^+ \end{bmatrix}$$

$$S_{11} = \left.\frac{V_1^-}{V_1^+}\right|_{V_2^+=0} = \Gamma_1\big|_{\Gamma_2=0}$$

$$S_{21} = \left.\frac{V_2^-}{V_1^+}\right|_{V_2^+=0} = T_{21}\big|_{\Gamma_2=0}$$

- S11 este coeficientul de reflexie la portul 1 cand portul 2 este terminat pe impedanta care realizeaza adaptarea
- S21 este coeficientul de transmisie de la portul 1 la portul 2 cand portul 2 este terminat pe impedanta care realizeaza adaptarea

Matricea S generalizata

- Definim undele de putere

$$a = \frac{V + Z_R \cdot I}{2 \cdot \sqrt{R_R}}$$ unda incidenta de putere

$$b = \frac{V - Z_R^* \cdot I}{2 \cdot \sqrt{R_R}}$$ unda reflectata de putere

$$Z_R = R_R + j \cdot X_R$$

O impedanta de referinta oarecare, complexa

- Tensiuni si curenti

$$V = \frac{Z_R^* \cdot a + Z_R \cdot b}{\sqrt{R_R}}$$

$$I = \frac{a - b}{\sqrt{R_R}}$$

Matricea S (repartitie)

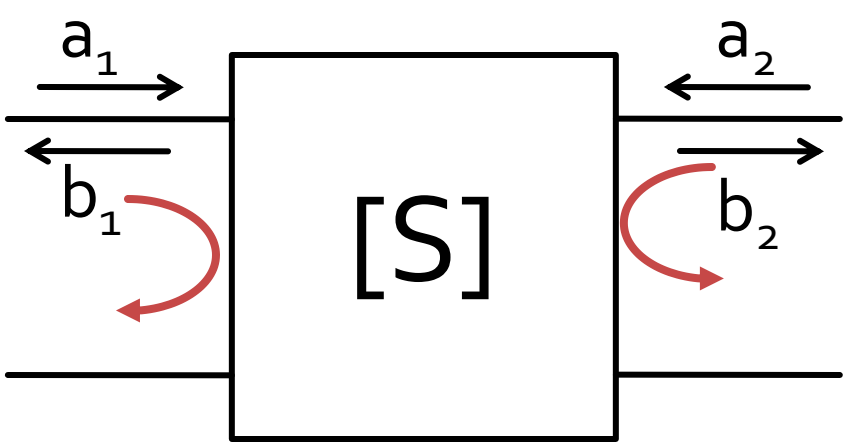

$$\begin{bmatrix} b_1 \\ b_2 \end{bmatrix} = \begin{bmatrix} S_{11} & S_{12} \\ S_{21} & S_{22} \end{bmatrix} \cdot \begin{bmatrix} a_1 \\ a_2 \end{bmatrix}$$

$$S_{11} = \left.\frac{b_1}{a_1}\right|_{a_2=0} \qquad S_{22} = \left.\frac{b_2}{a_2}\right|_{a_1=0}$$

- S_{11} si S_{22} sunt coeficienti de reflexie la intrare si iesire cand celalalt port este adaptat

Matricea S (repartitie)

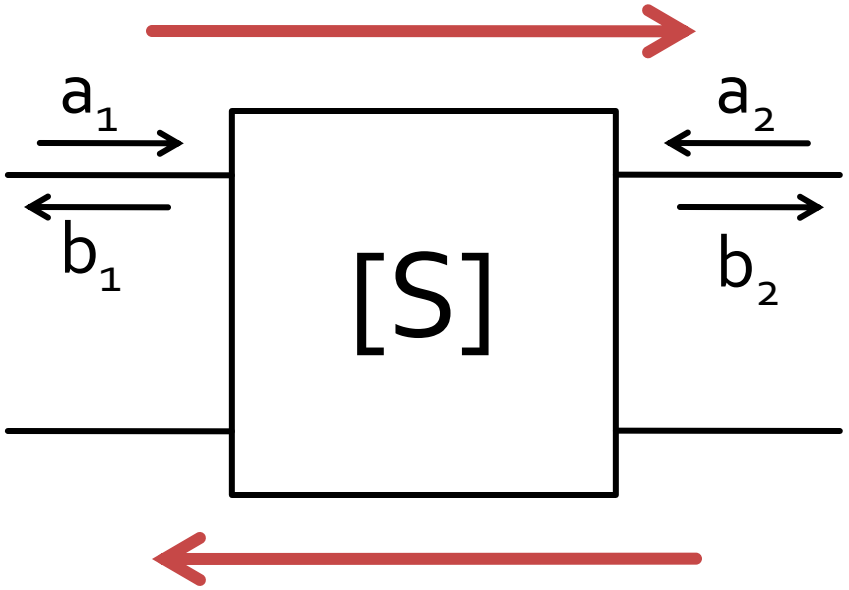

$$\begin{bmatrix} b_1 \\ b_2 \end{bmatrix} = \begin{bmatrix} S_{11} & S_{12} \\ S_{21} & S_{22} \end{bmatrix} \cdot \begin{bmatrix} a_1 \\ a_2 \end{bmatrix}$$

$$S_{21} = \left.\frac{b_2}{a_1}\right|_{a_2=0} \qquad S_{12} = \left.\frac{b_1}{a_2}\right|_{a_1=0}$$

- S_{21} si S_{12} sunt amplificari de semnal cand celalalt port este adaptat

Matricea S (repartitie)

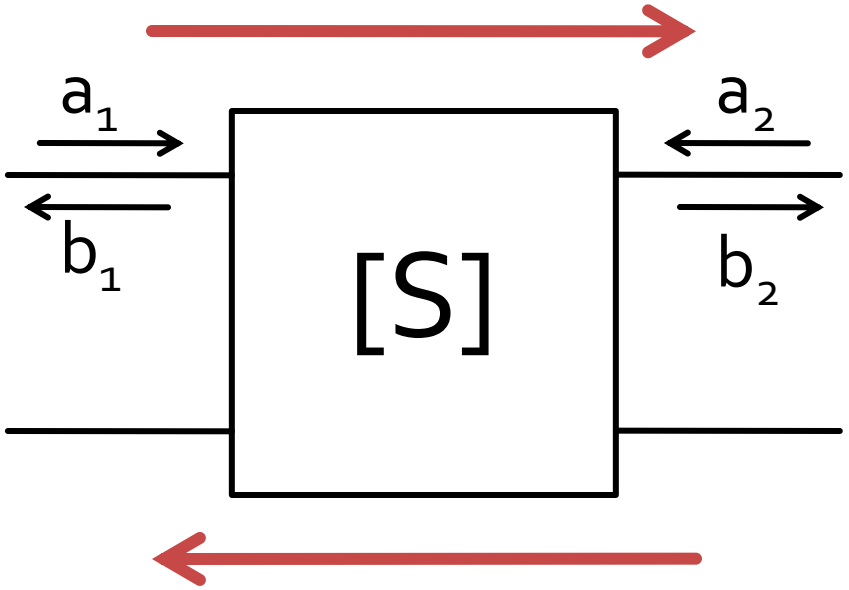

$$\begin{bmatrix} b_1 \\ b_2 \end{bmatrix} = \begin{bmatrix} S_{11} & S_{12} \\ S_{21} & S_{22} \end{bmatrix} \cdot \begin{bmatrix} a_1 \\ a_2 \end{bmatrix}$$

$$|S_{21}|^2 = \frac{Putere\ sarcina\ Z_0}{Putere\ sursa\ Z_0}$$

- a,b
  - informatia despre putere **SI** faza
- S_{ij}
  - influenta circuitului asupra puterii semnalului incluzand informatiile relativ la faza

Masurare S - VNA

- Vector Network Analyzer

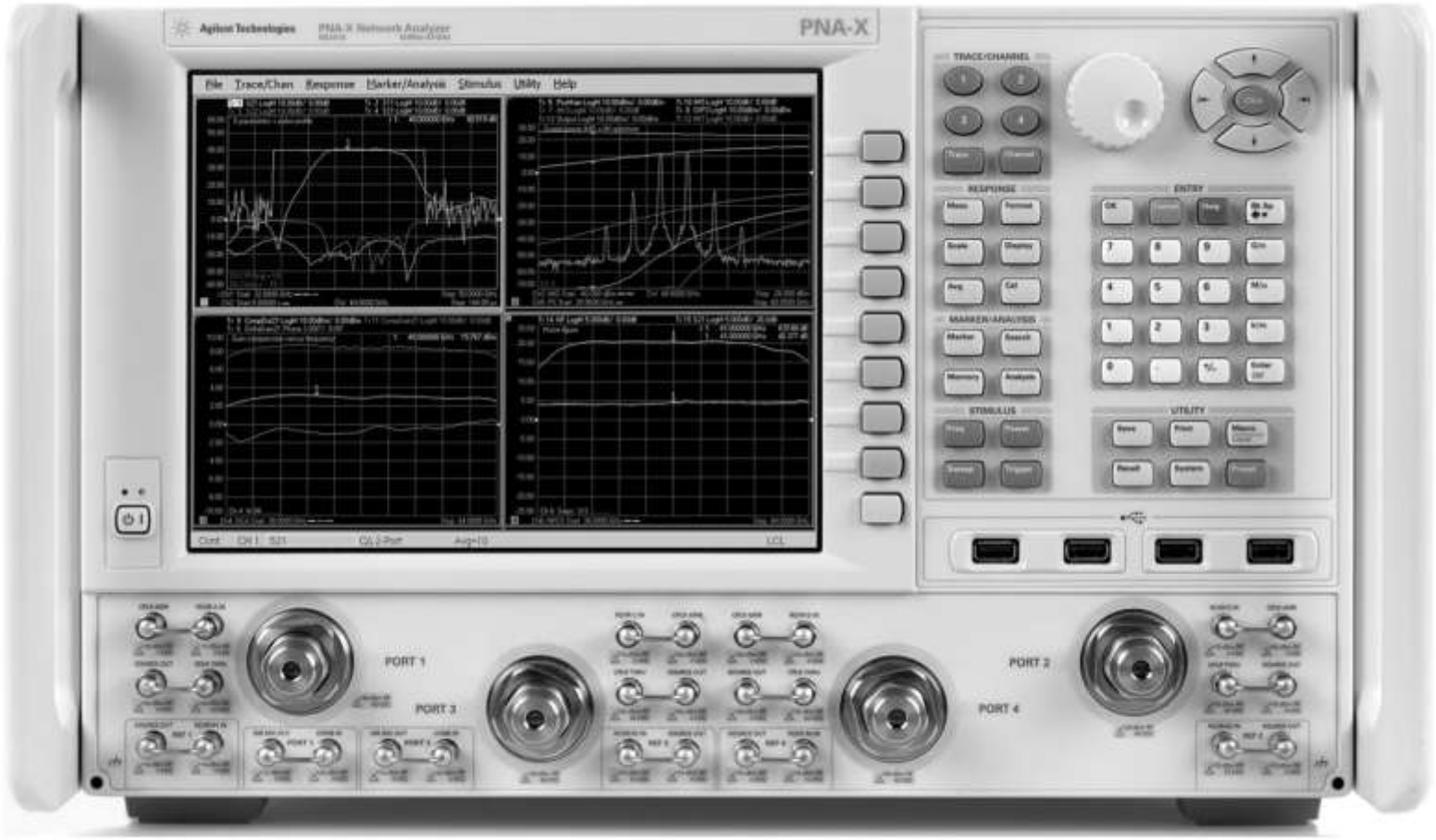

Figure 4.7
Courtesy of Agilent Technologies

Legatura dintre parametrii S si parametrii ABCD

$$A = \sqrt{\frac{Z_{01}}{Z_{02}}}\,\frac{\left(1+S_{11}-S_{22}-\Delta S\right)}{2S_{21}}$$

$$B = \sqrt{Z_{01}Z_{02}}\,\frac{\left(1+S_{11}+S_{22}+\Delta S\right)}{2S_{21}}$$

$$C = \frac{1}{\sqrt{Z_{01}Z_{02}}}\,\frac{1-S_{11}-S_{22}+\Delta S}{2S_{21}}$$

$$D = \sqrt{\frac{Z_{02}}{Z_{01}}}\,\frac{1-S_{11}+S_{22}-\Delta S}{2S_{21}}$$

$$\Delta S = S_{11}S_{22} - S_{12}S_{21}$$

$$S_{11} = \frac{AZ_{02}+B-CZ_{01}Z_{02}-DZ_{01}}{AZ_{02}+B+CZ_{01}Z_{02}+DZ_{01}}$$

$$S_{12} = \frac{2(AD-BC)\sqrt{Z_{01}Z_{02}}}{AZ_{02}+B+CZ_{01}Z_{02}+DZ_{01}}$$

$$S_{21} = \frac{2\sqrt{Z_{01}Z_{02}}}{AZ_{02}+B+CZ_{01}Z_{02}+DZ_{01}}$$

$$S_{22} = \frac{-AZ_{02}+B-CZ_{01}Z_{02}+DZ_{01}}{AZ_{02}+B+CZ_{01}Z_{02}+DZ_{01}}$$

Adaptarea de impedanța

Diagrama Smith

Diagrama Smith

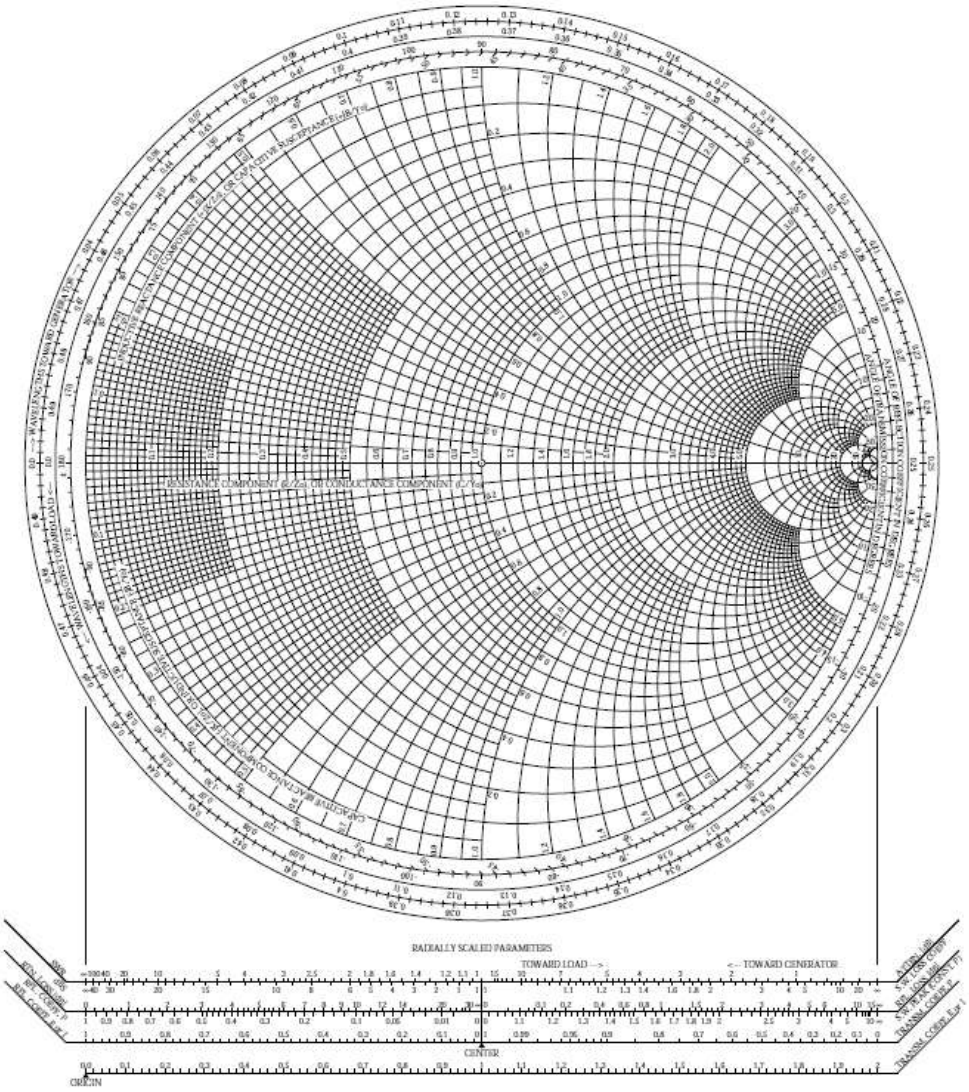

Diagrama Smith

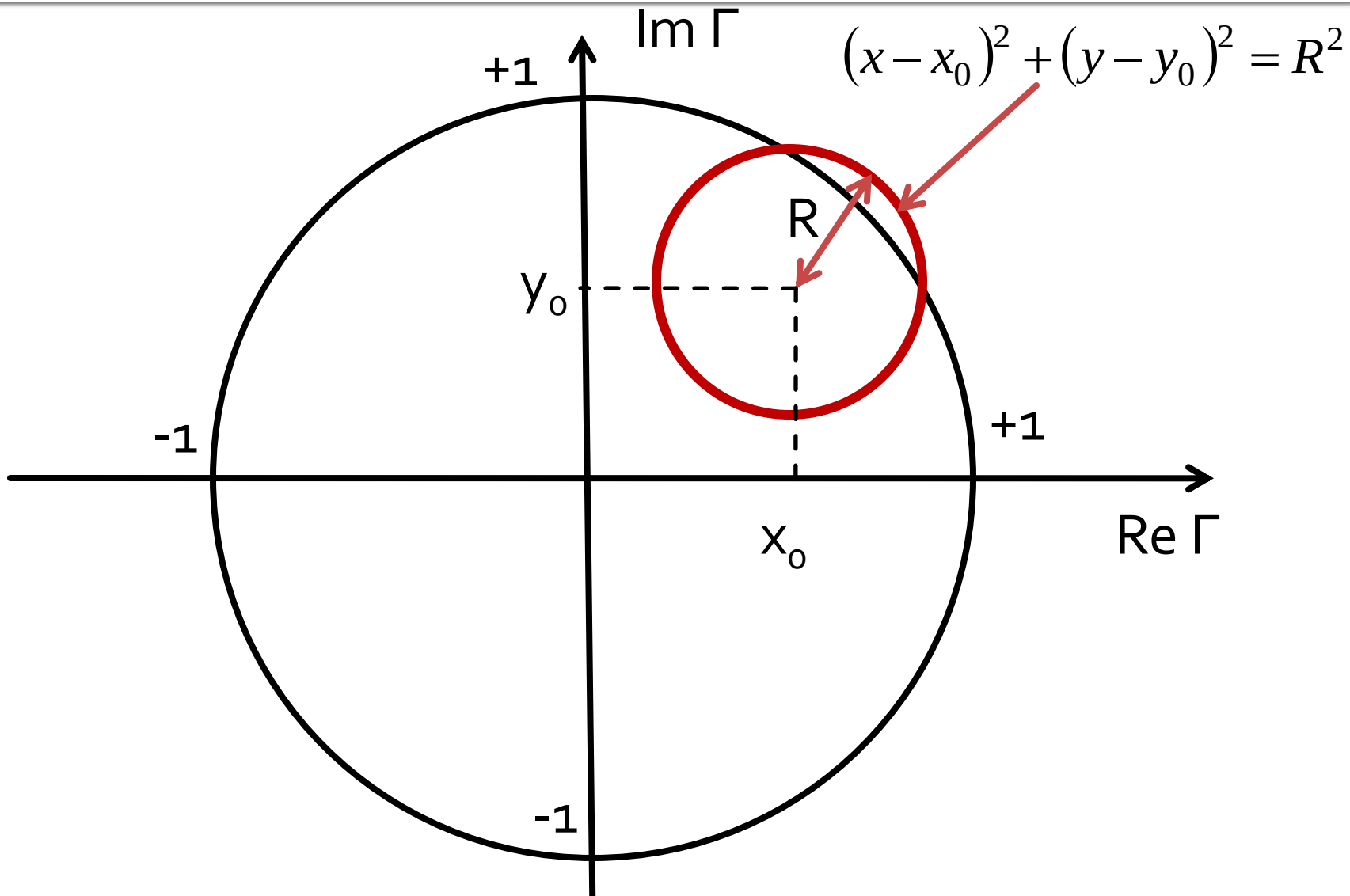

Diagrama Smith, rezistenta

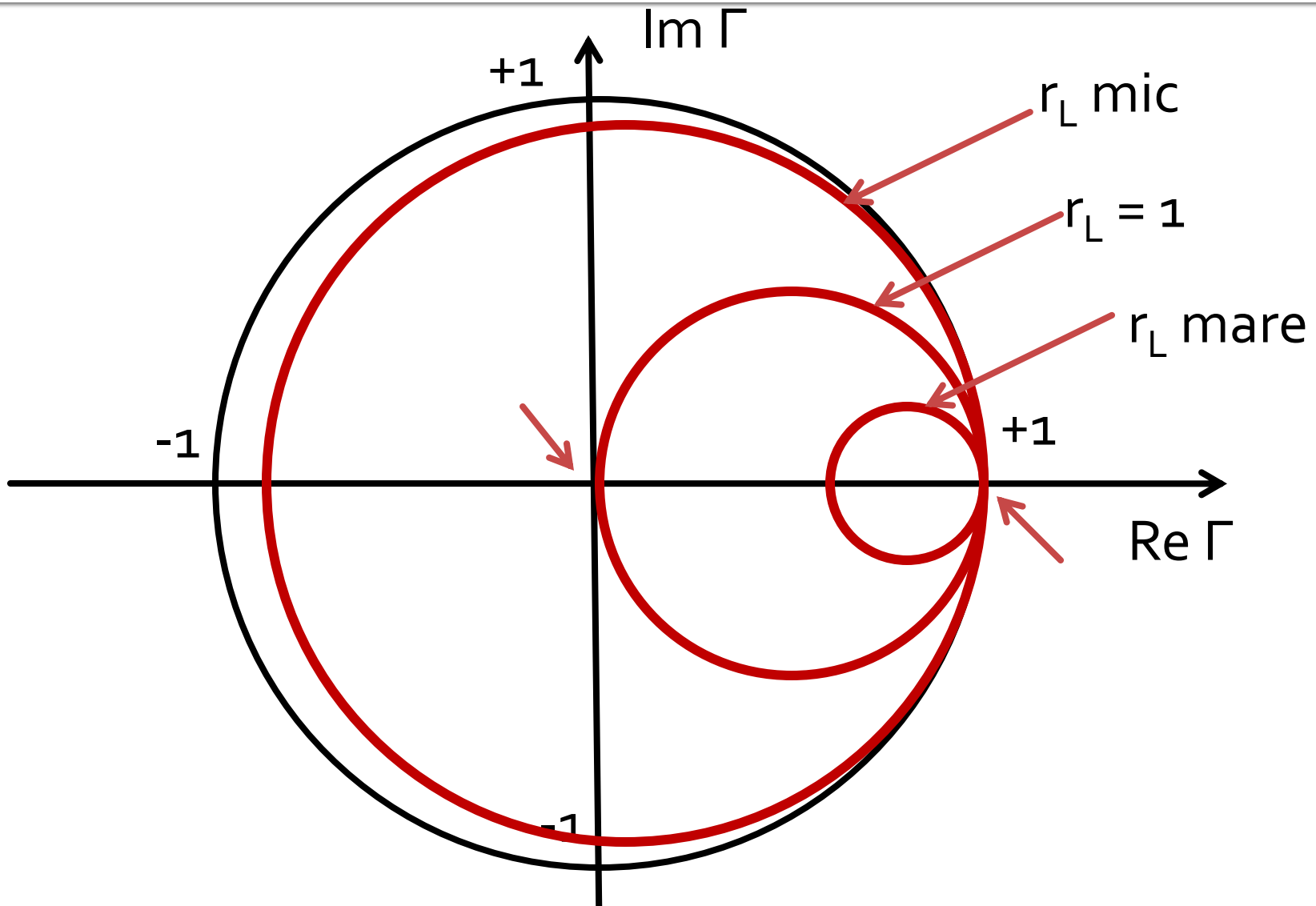

Diagrama Smith, reactanta

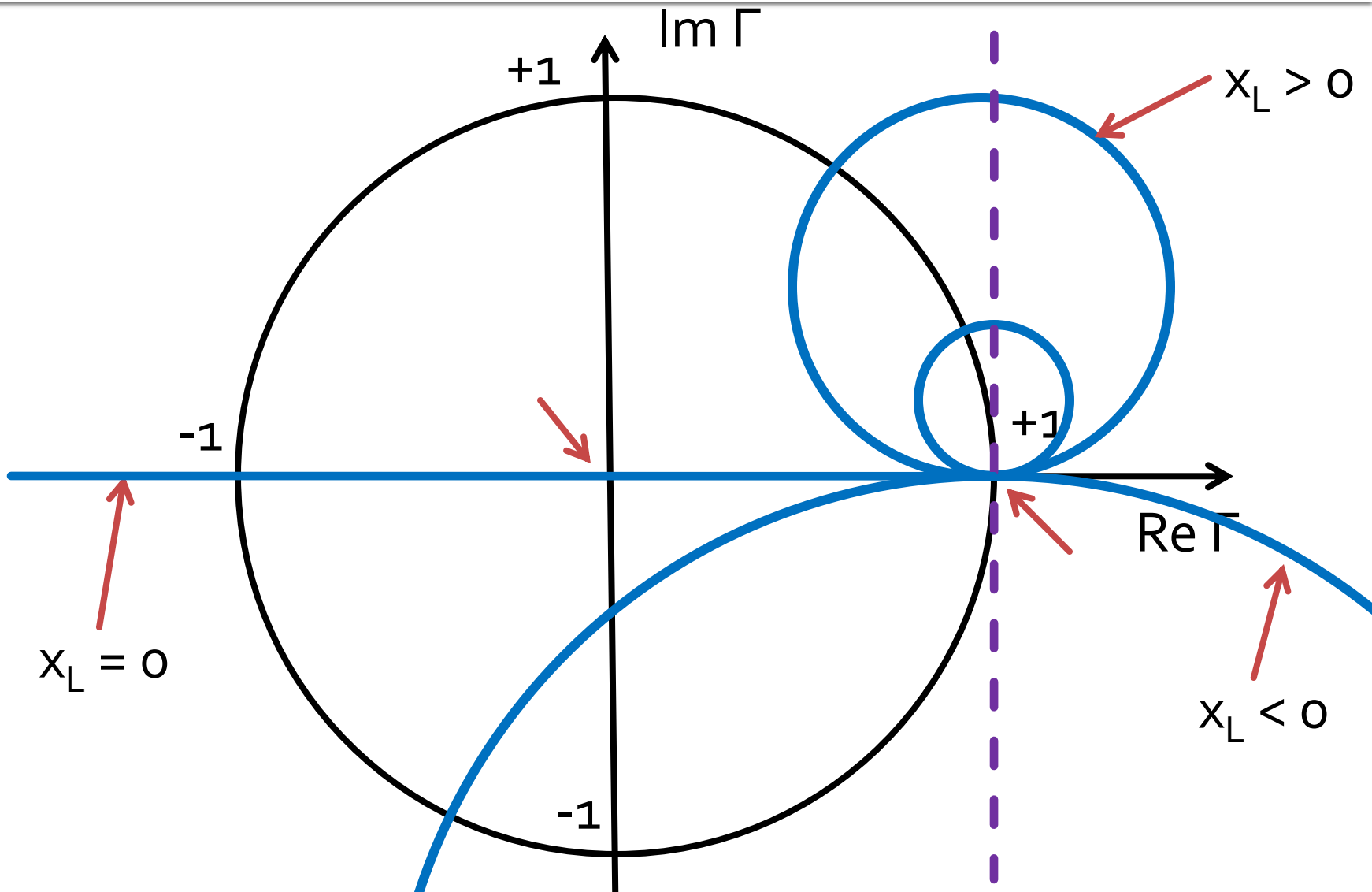

Diagrama Smith, impedanta

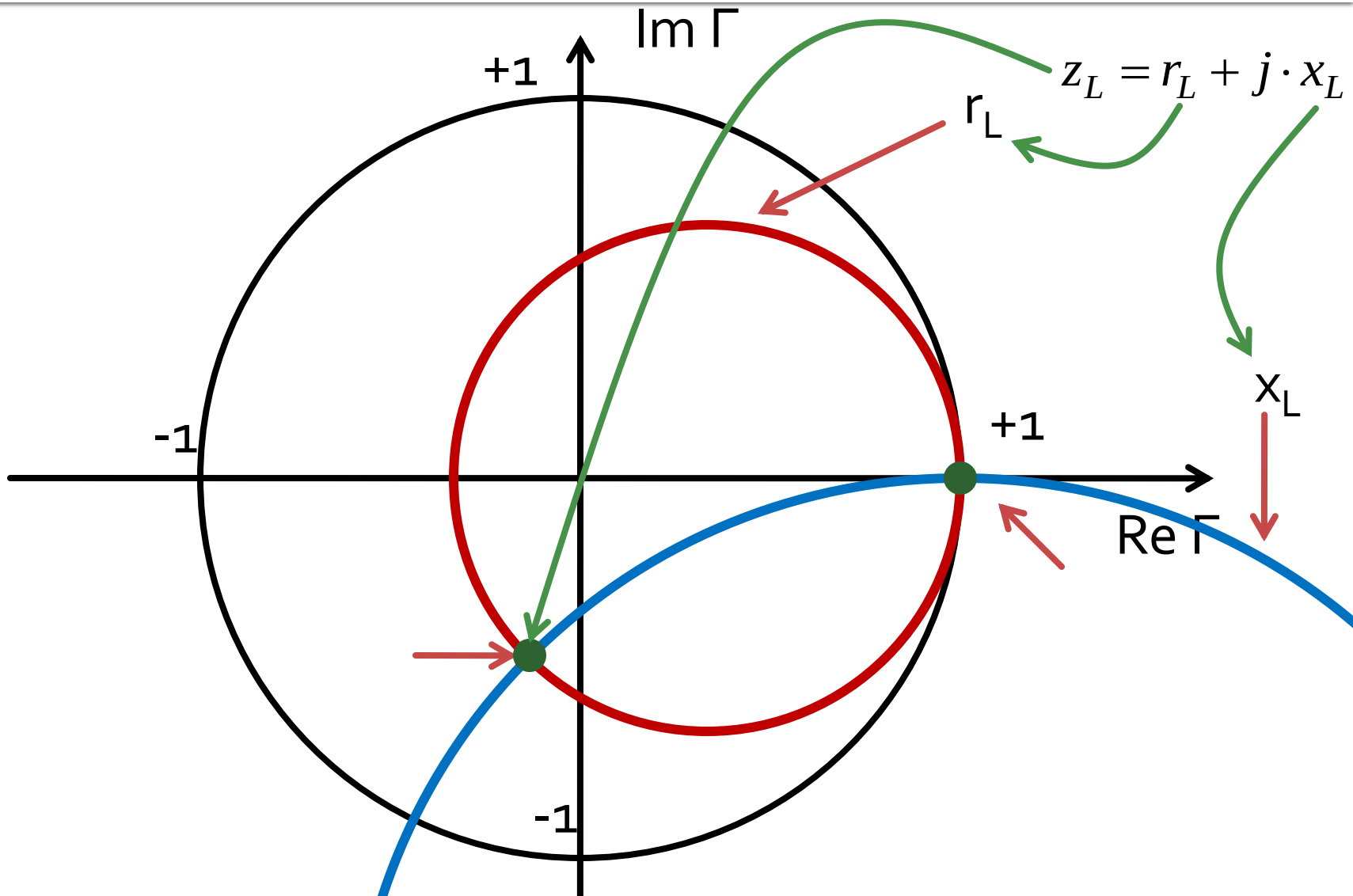

Diagrama Smith

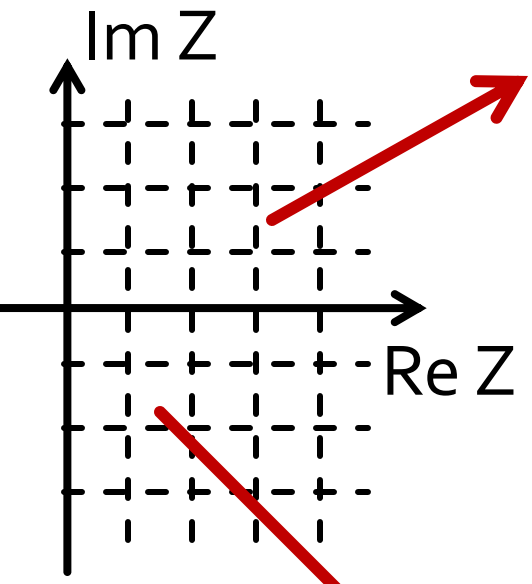

$$\Gamma = \frac{Z_L - Z_0}{Z_L + Z_0} = \frac{z_L - 1}{z_L + 1}$$

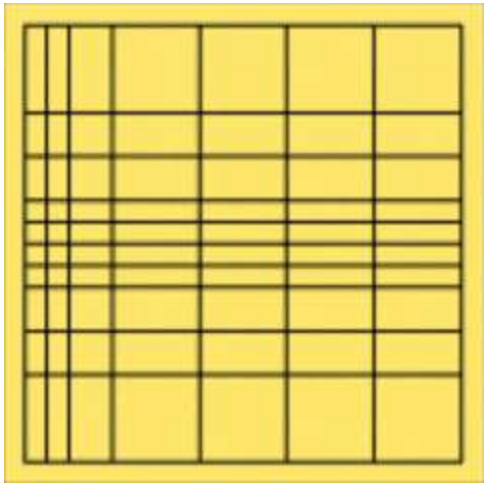

$$\Gamma = \frac{Z_L - Z_0}{Z_L + Z_0} = \frac{Y_0 - Y_L}{Y_0 + Y_L} = \frac{1 - y_L}{1 + y_L}$$

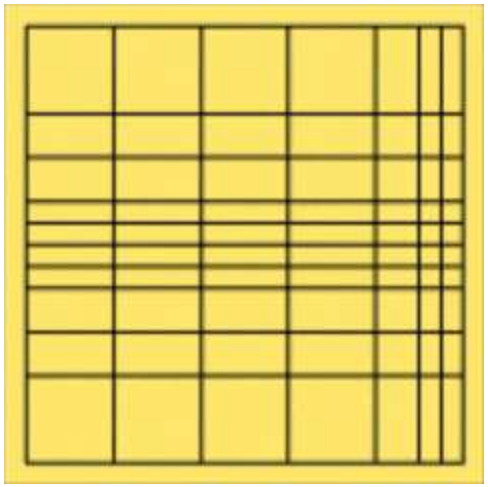

Diagrama Smith

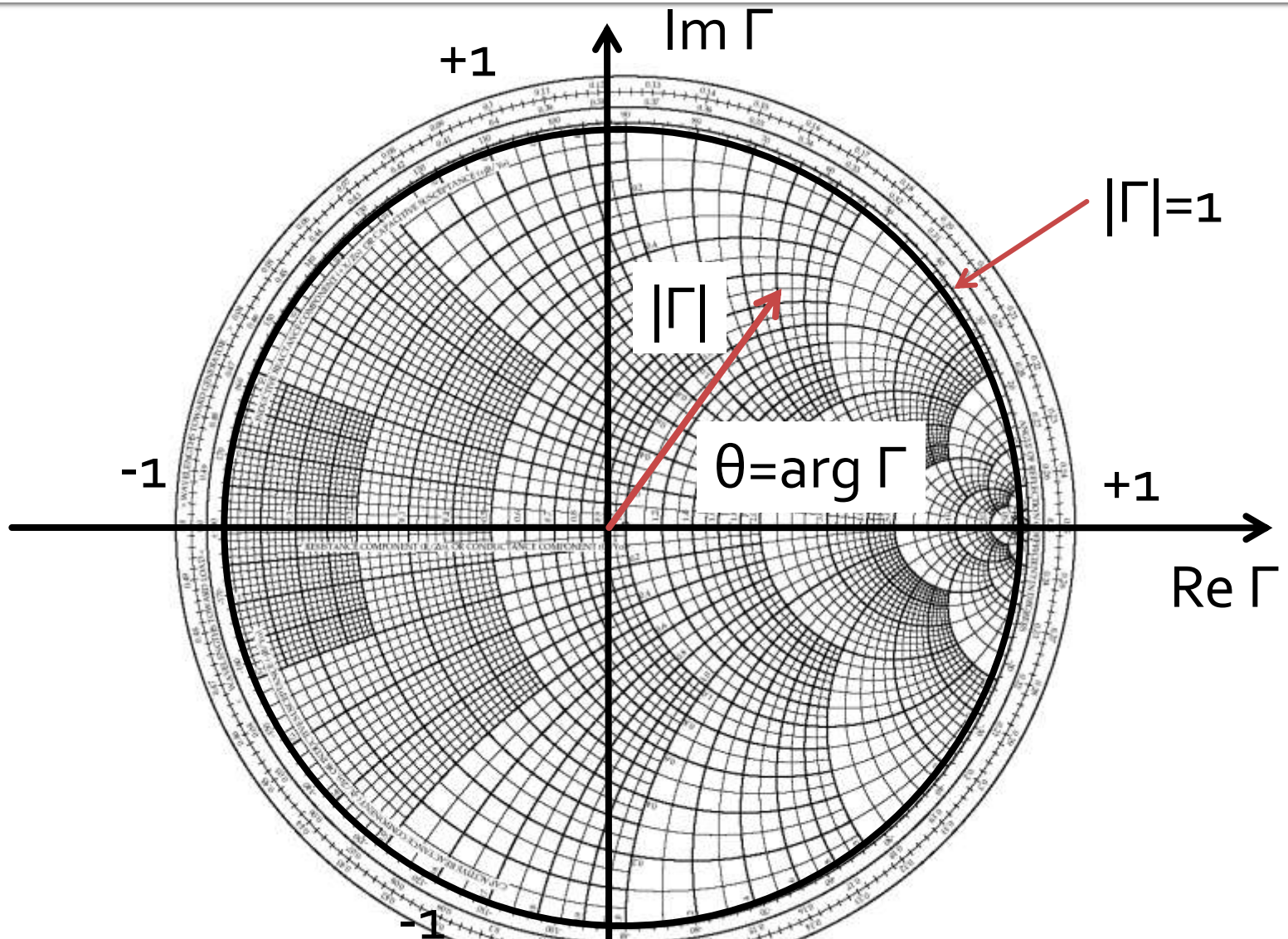

Exemplu

- linie de transmisie
  - 100Ω
  - 0.3λ lungime
  - Z_L = 40Ω+j·70Ω
- Zin=?
- Pozitionare pe diagrama ?

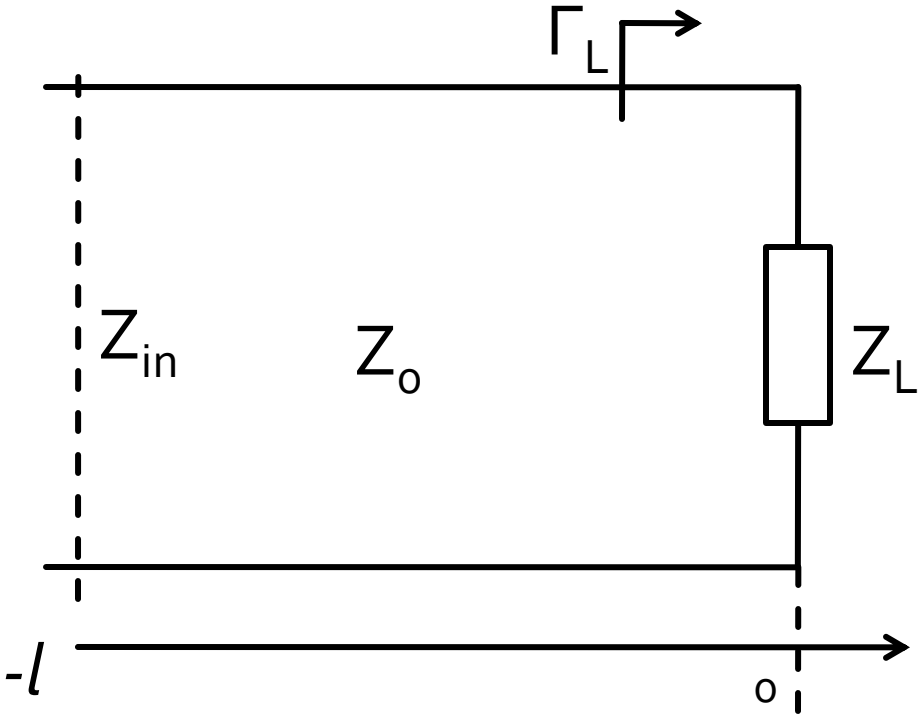

Exemplu

- linie de transmisie
  - 100Ω
  - 0.3λ lungime
  - $Z_L = 40\Omega + j \cdot 70\Omega$
- raportare la $Z_0 = 100\Omega$

$$z_L = \frac{Z_L}{Z_0} = 0.4 + j \cdot 0.7$$

- deplasare 0.3λ pe o linie cu $Z_0 = 100\Omega$ (**cerc**)
  - Plecand din z_L (0.105λ)
  - Pana la z_{in} (0.405λ)

$$z_{in} \approx 0.36 + j \cdot 0.6 = \frac{Z_{in}}{Z_0}$$

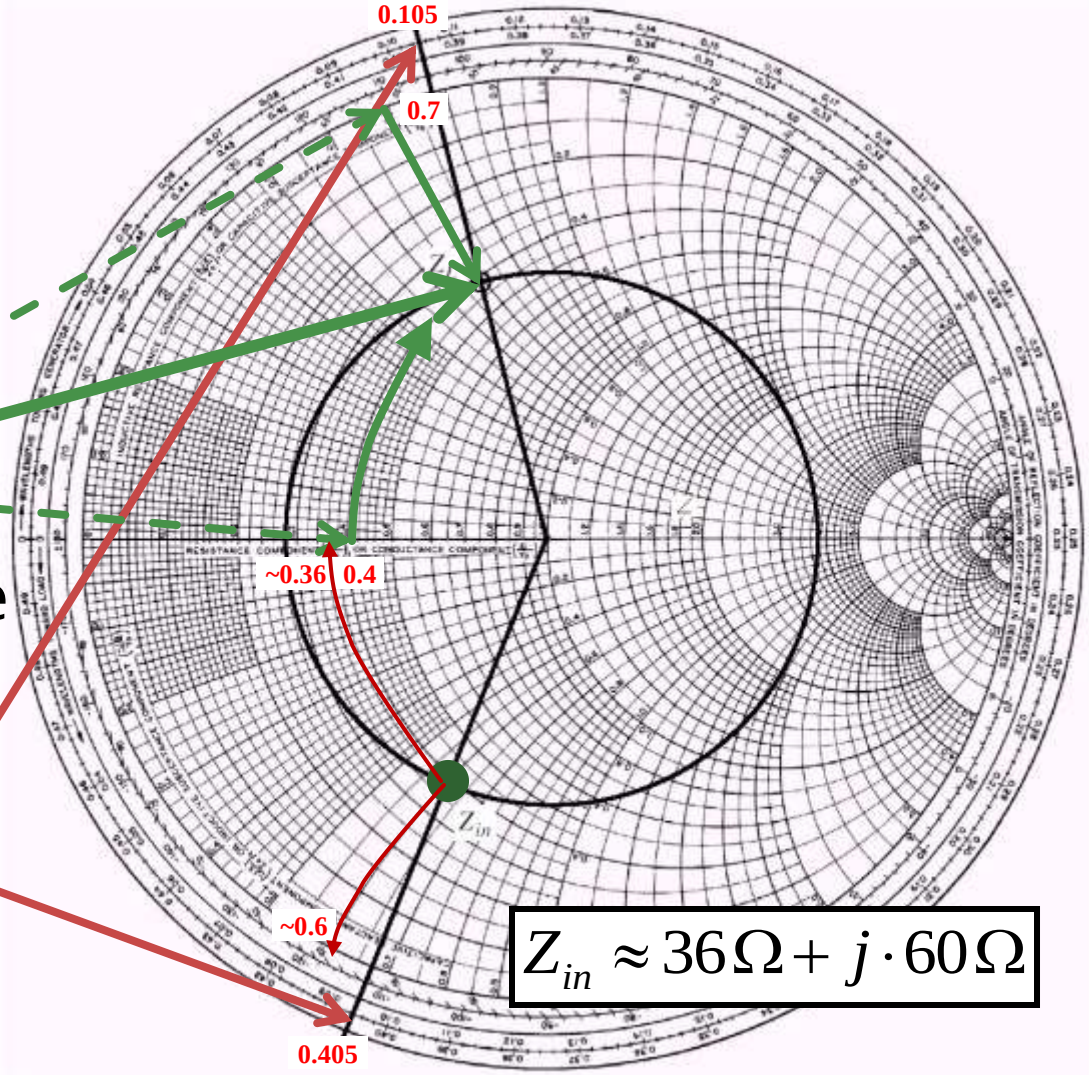

Exemplu

- linie de transmisie
  - 100Ω
  - 0.3λ lungime
  - $Z_L = 40\Omega + j\cdot 70\Omega$
- Zin=?
- Pozitionare pe diagrama ?

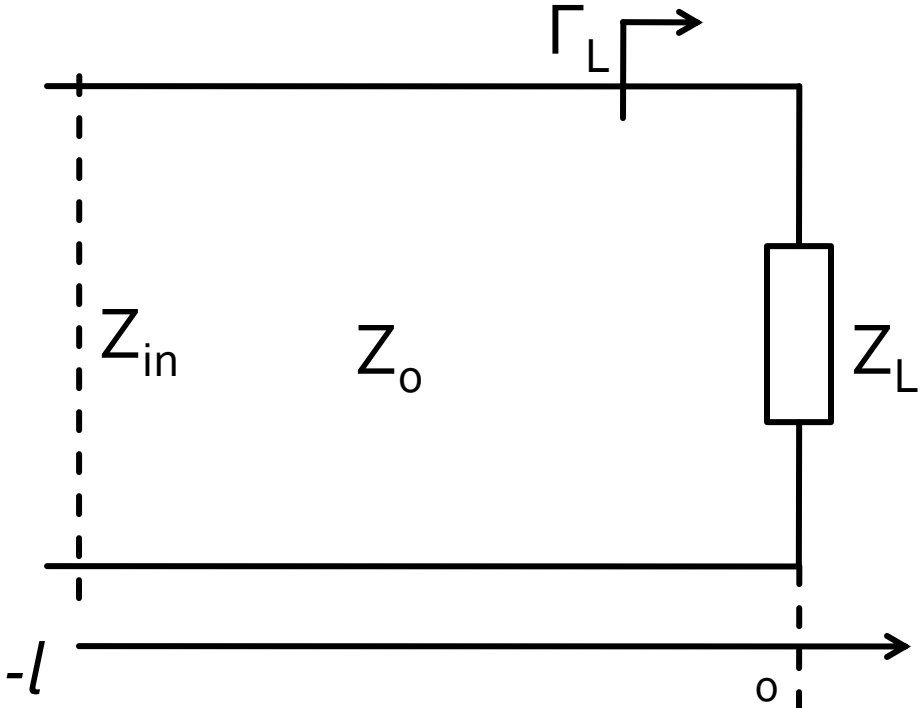

$$Z_{in} = Z_0 \cdot \frac{Z_L + j\cdot Z_0 \cdot \tan\beta\cdot l}{Z_0 + j\cdot Z_L \cdot \tan\beta\cdot l}$$

$$Z_{in} = 36.534\Omega - j\cdot 61.119\Omega$$

$$\Gamma_{in} = \frac{Z_{in} - Z_0}{Z_{in} + Z_0} = -0.220 - j\cdot 0.546$$

$$\Gamma = |\Gamma| \angle \theta°$$

$$|\Gamma| = 0.589$$

$$\theta° = \frac{180°}{\pi} \cdot \arg(\Gamma) = -111.96°$$

$$\Gamma = 0.589 \angle -111.96°$$

Diagrama Smith, coeficient de reflexie, coordonate rectangulare

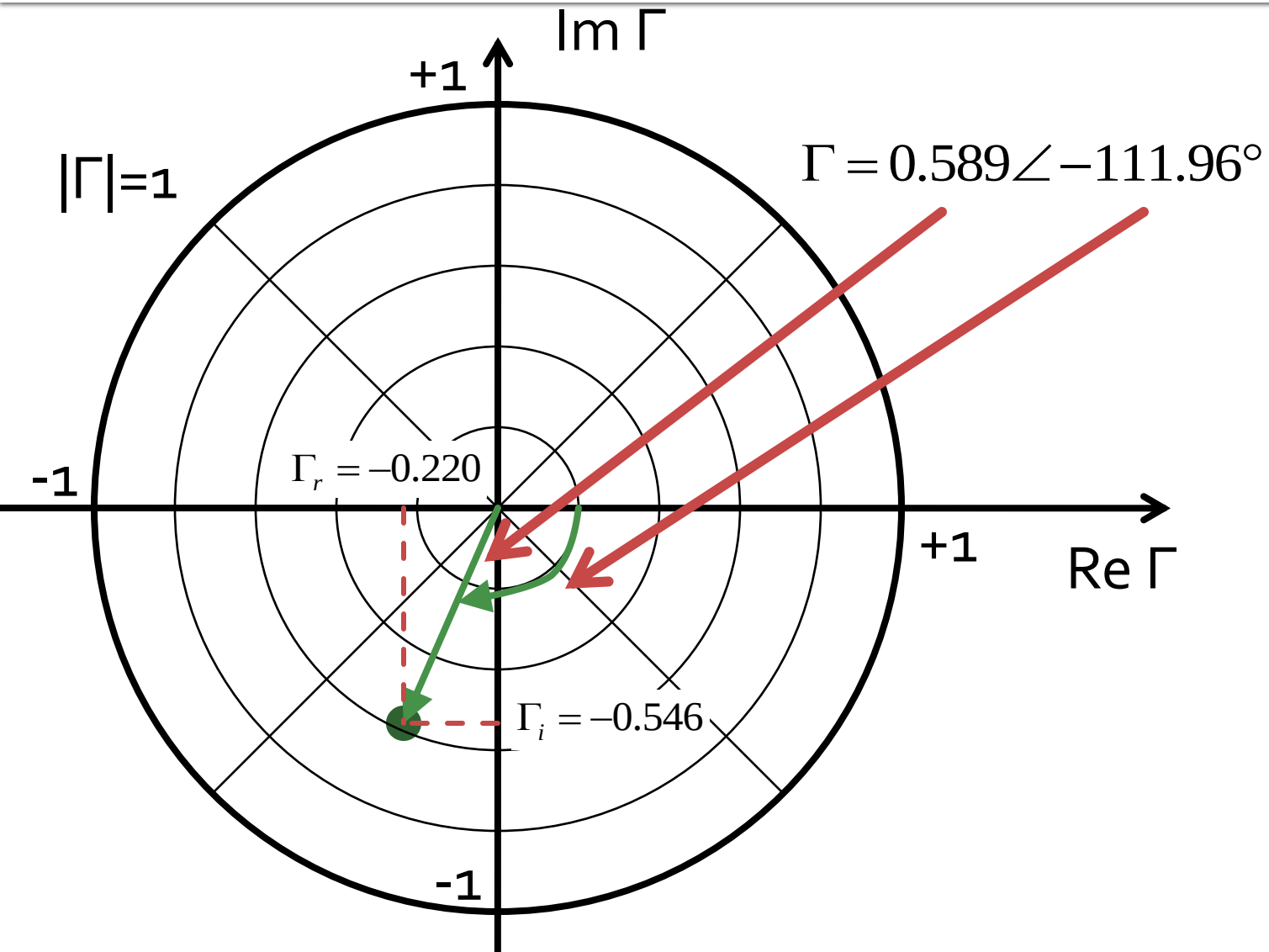

Diagrama Smith, coeficient de reflexie, adaptare

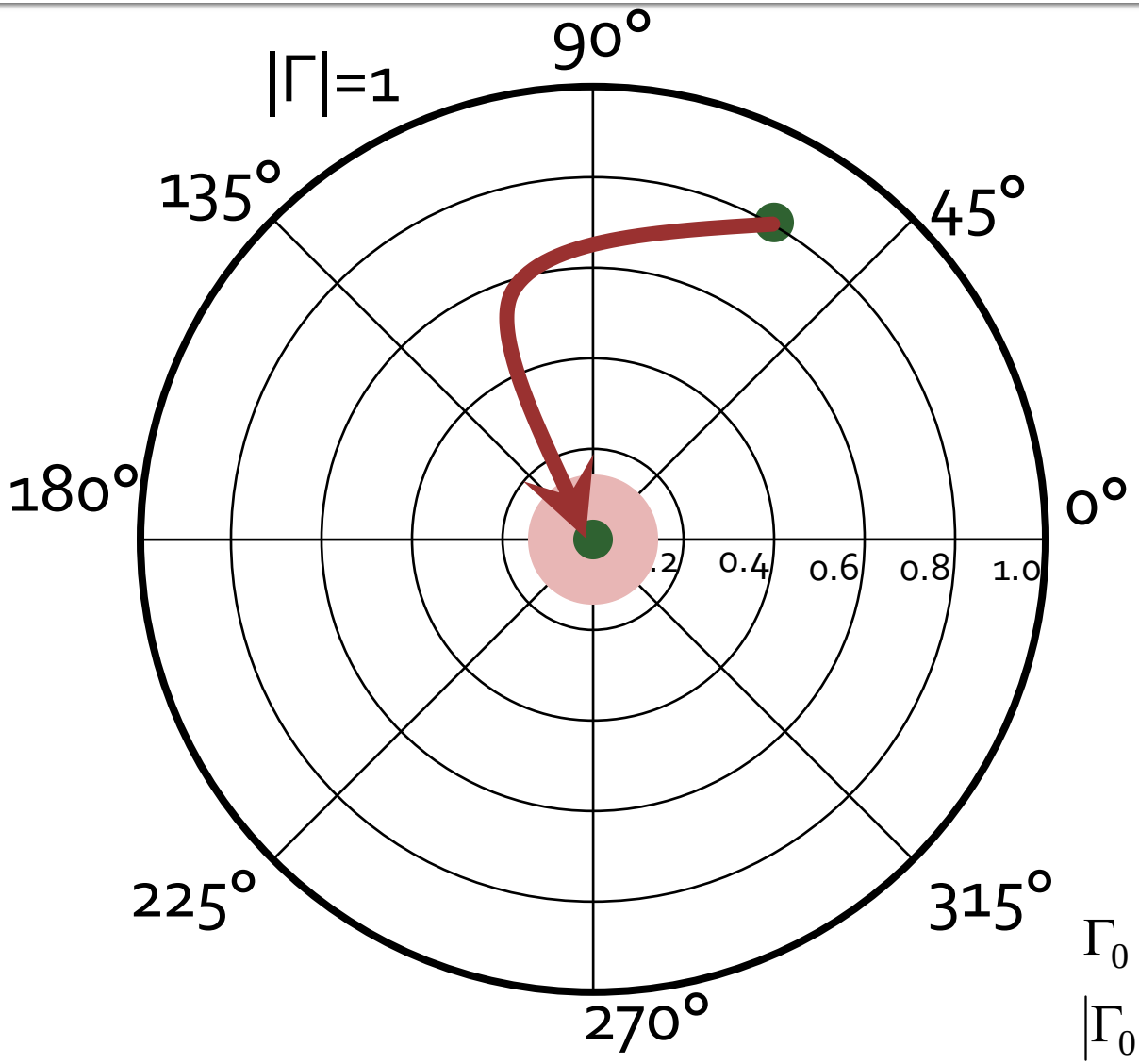

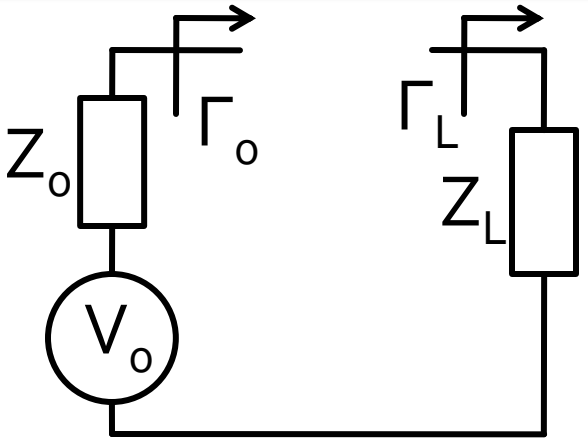

Adaptare Z_L la Z_0. Se raporteaza Z_L la Z_0

Trebuie sa deplasez coeficientul de reflexie in zona in care pentru generator cu Z_0 am:

$\Gamma_0 = 0$ adaptare perfecta

$|\Gamma_0| \leq \Gamma_m$ adaptare "suficienta"

Diagrama Smith, coeficient de reflexie, reactanta in serie

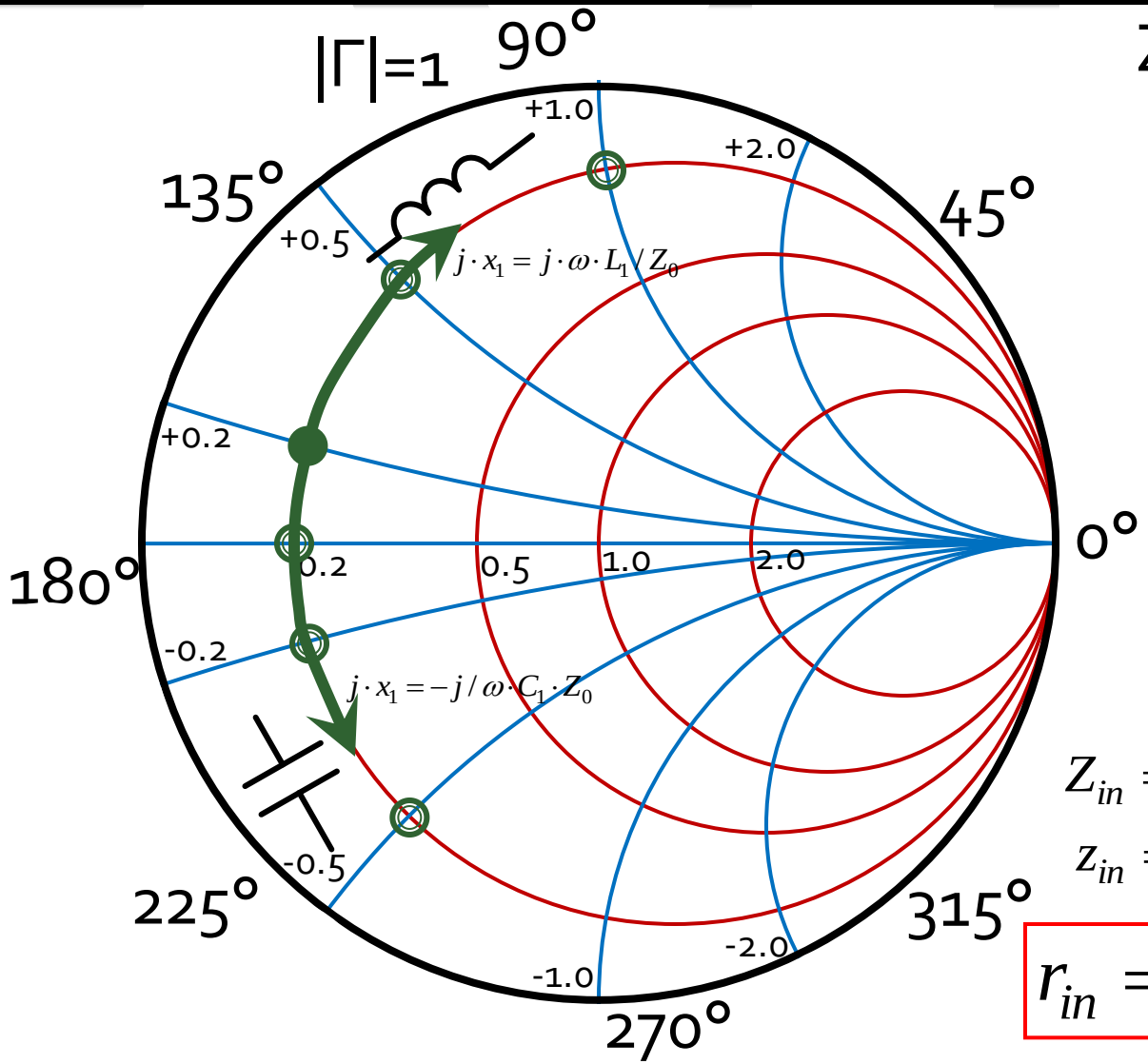

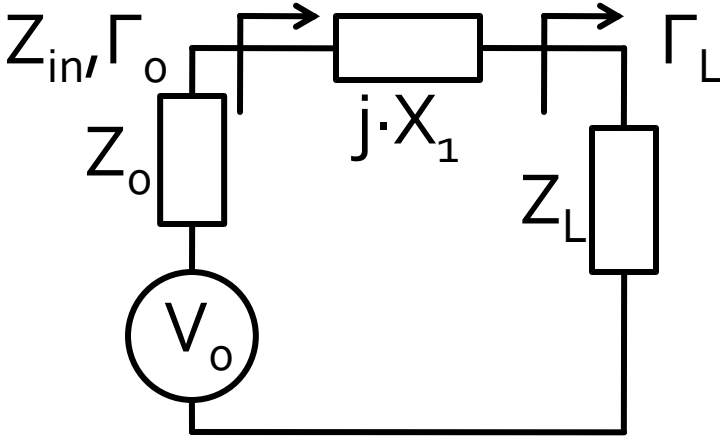

$$Z_0 = 50\Omega$$

$$Z_L = R_L + j \cdot X_L = 10\Omega + j \cdot 10$$

$$z_L = r_L + j \cdot x_L = 0.2 + j \cdot 0.2$$

$$\Gamma_L = 0.678 \angle 156.5°$$

$$Z_{in} = Z_L + j \cdot X_1 = R_L + j \cdot (X_L + X_1$$

$$z_{in} = r_L + j \cdot (x_L + x_1)$$

$$r_{in} = r_L$$

$$j \cdot x_1 = j \cdot \omega \cdot L_1 / Z_0 > 0$$

$$j \cdot x_1 = -j / \omega \cdot C_1 \cdot Z_0 < 0$$

Diagrama Smith, coeficient de reflexie, rezistenta in serie

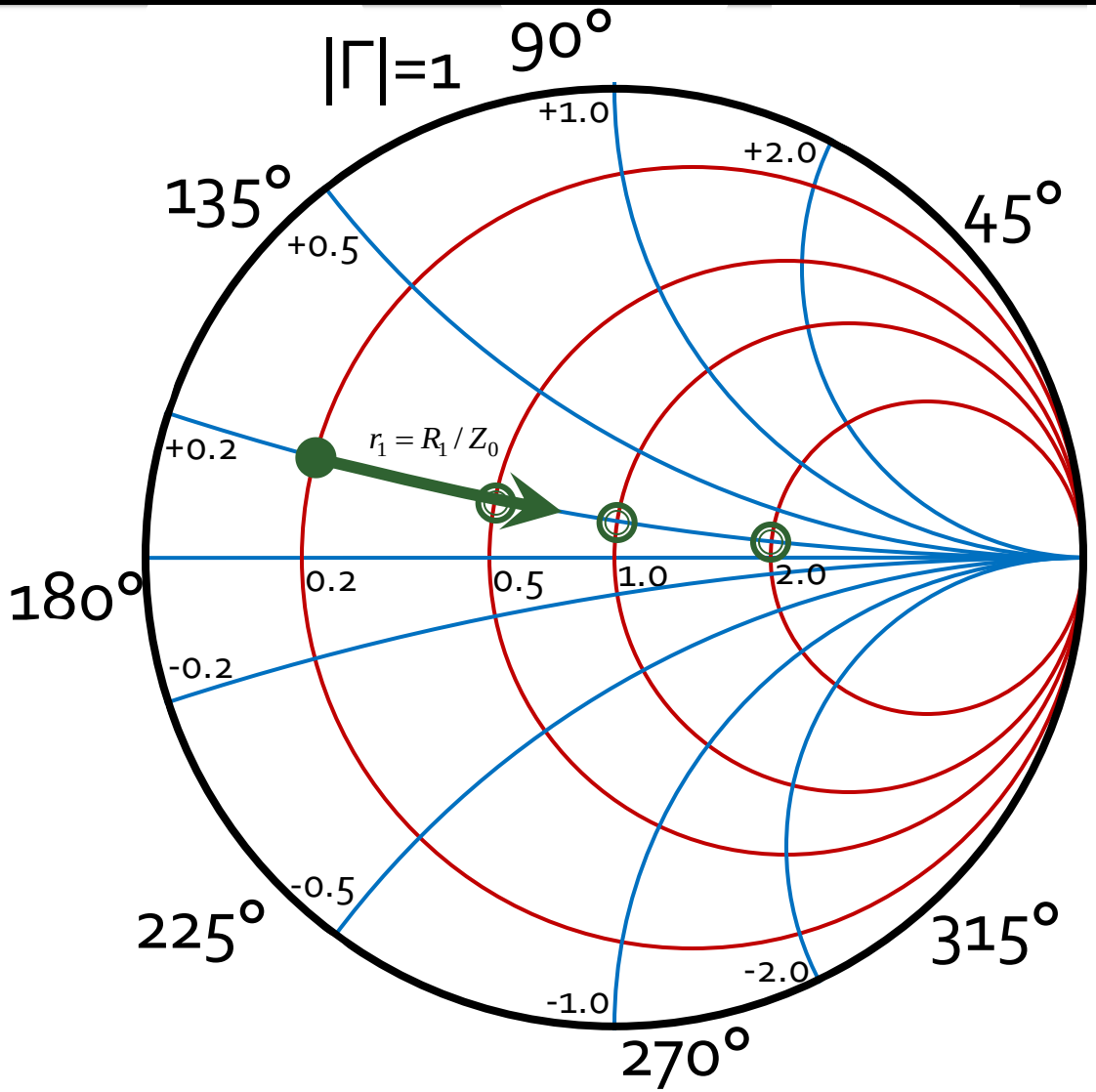

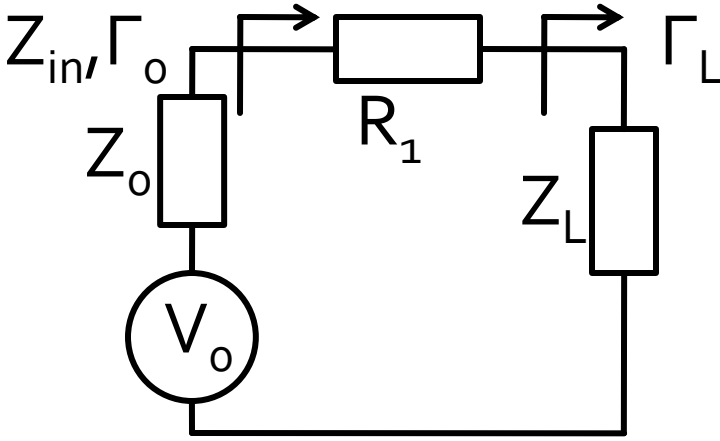

$$Z_0 = 50\Omega$$

$$Z_L = R_L + j \cdot X_L = 10\Omega + j \cdot 10$$

$$z_L = r_L + j \cdot x_L = 0.2 + j \cdot 0.2$$

$$\Gamma_L = 0.678 \angle 156.5°$$

$$Z_{in} = Z_L + R_1 = (R_L + R_1) + j \cdot X_L$$

$$z_{in} = z_L + r_1 = (r_L + r_1) + j \cdot x_L$$

$$\boxed{x_{in} = x_L} \qquad r_{in} = r_L + R_1 / Z_0$$

Diagrama Smith, coeficient de reflexie, linie de transmisie in serie

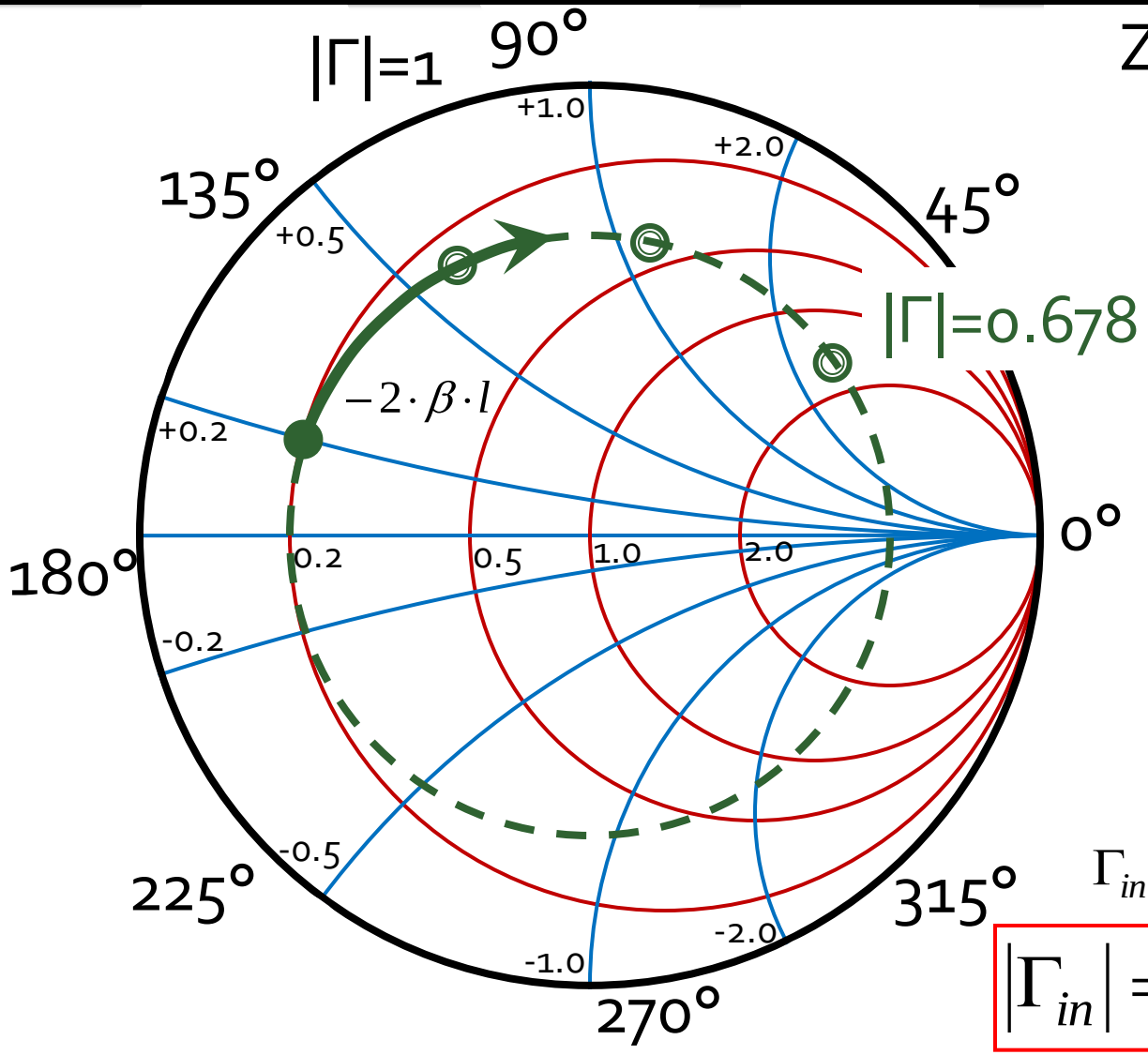

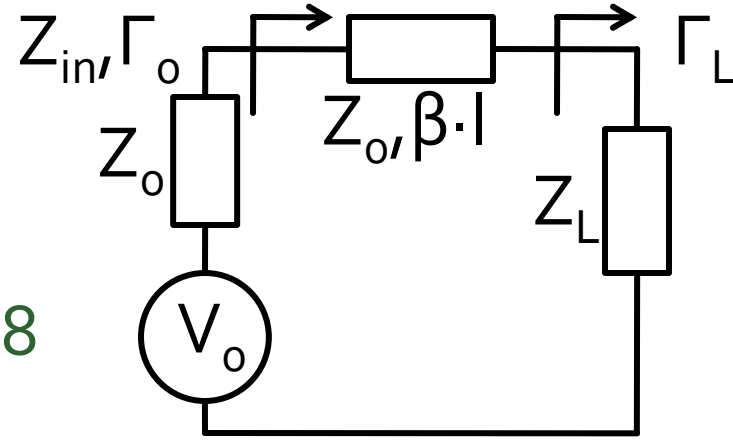

$$Z_0 = 50\Omega$$

$$Z_L = R_L + j\cdot X_L = 10\Omega + j\cdot 10$$

$$z_L = r_L + j\cdot x_L = 0.2 + j\cdot 0.2$$

$$\Gamma_L = 0.678\angle 156.5°$$

$$Z_{in} = Z_0\cdot\frac{1+\Gamma_L\cdot e^{-2j\cdot\beta\cdot l}}{1-\Gamma_L\cdot e^{-2j\cdot\beta\cdot l}}$$

$$\Gamma_{in} = \Gamma_L\cdot e^{-2j\cdot\beta\cdot l}$$

$$\left|\Gamma_{in}\right| = \left|\Gamma_L\right|$$

$$\arg(\Gamma_{in}) = \arg(\Gamma_L) - 2\cdot\beta\cdot$$

Diagrama Smith, coeficient de reflexie, admitanta

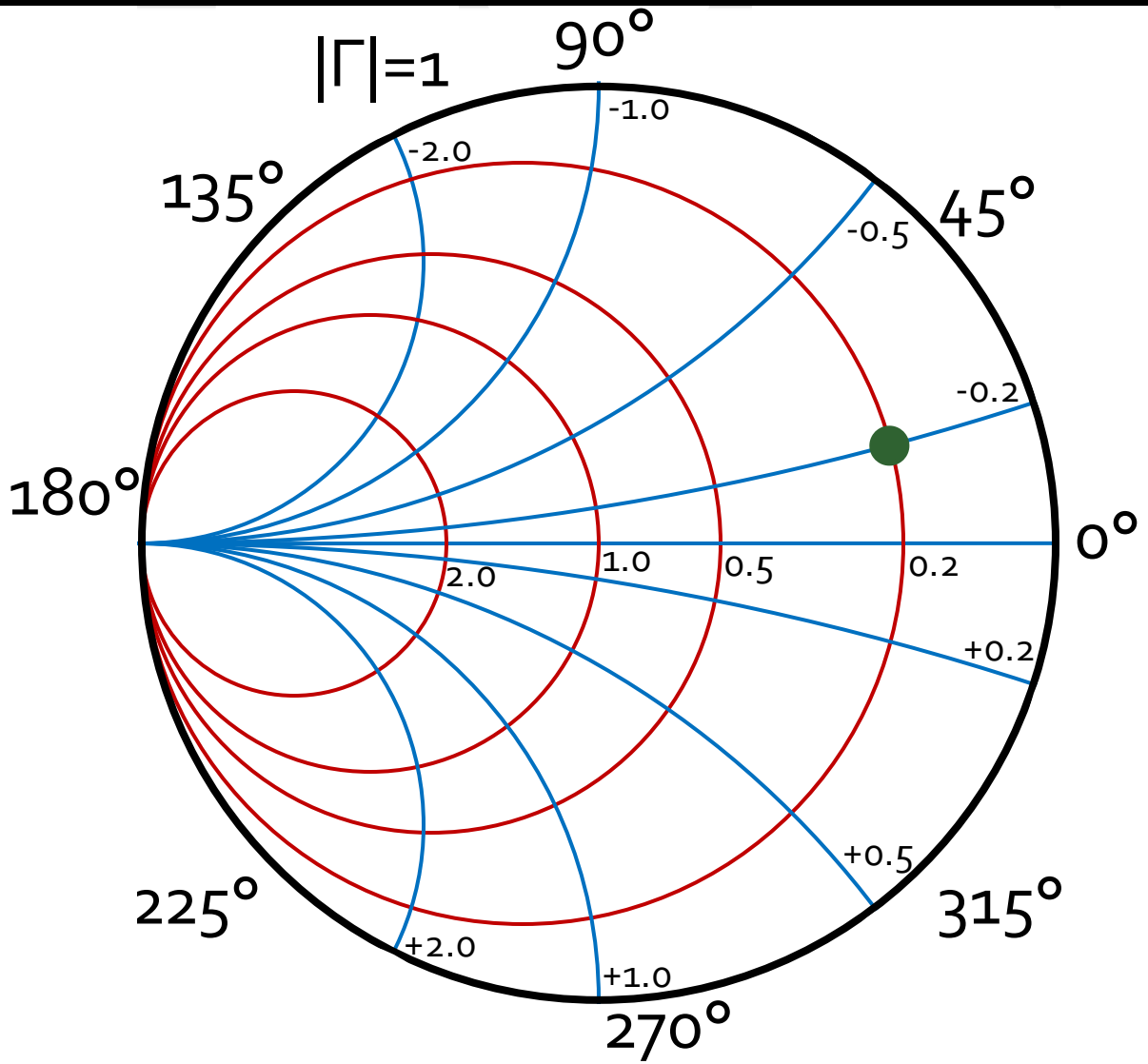

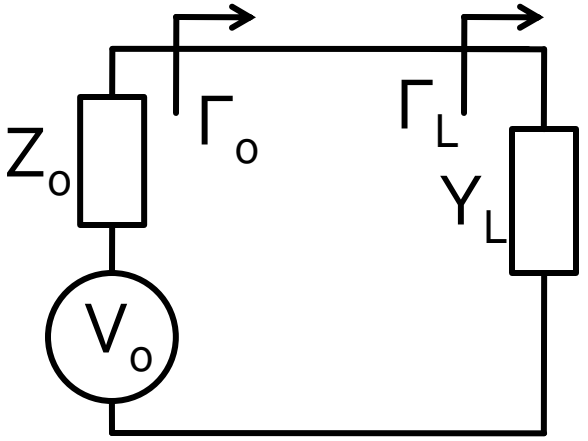

$$Z_0 = 50\Omega, Y_0 = 0.02S$$

$$Z_L = 125\Omega + j \cdot 125\Omega$$

$$z_L = 2.5 + j \cdot 2.5$$

$$\Gamma_L = \Gamma_0 = 0.678 \angle 23.5°$$

$$Y_L = \frac{1}{Z_L} = 0.004S - j \cdot 0.004S$$

$$y_L = \frac{1}{z_L} = \frac{Y_L}{Y_0} = 0.2 - j \cdot 0.2$$

Diagrama Smith, coeficient de reflexie, susceptanta in paralel

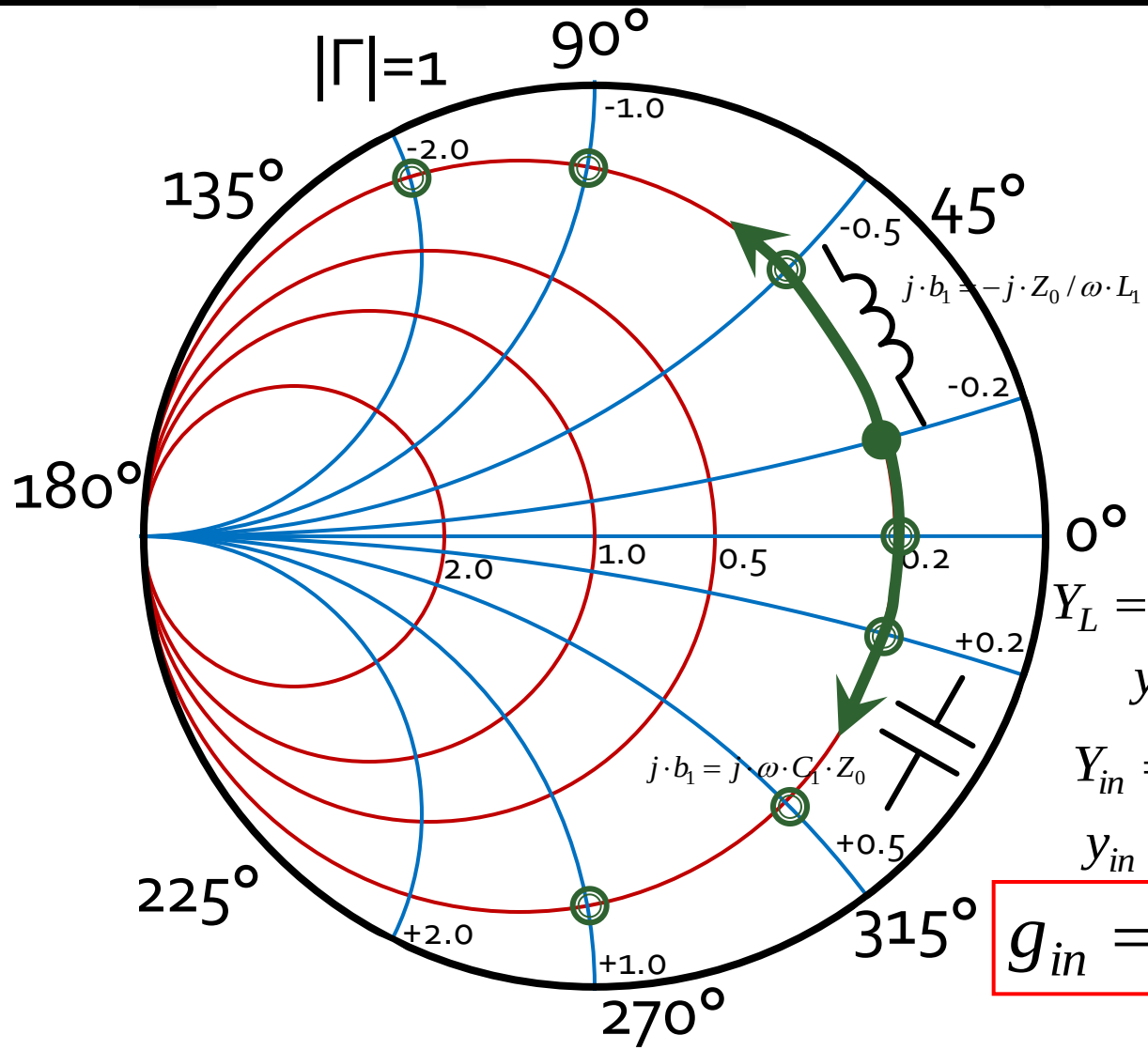

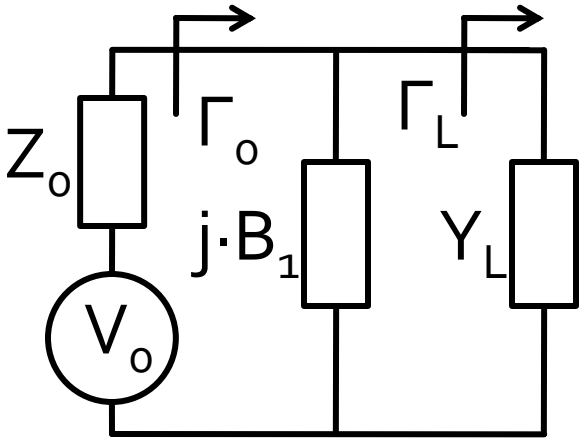

$$Z_0 = 50\Omega, Y_0 = 0.02S$$

$$\Gamma_L = 0.678 \angle 23.5°$$

$$Y_L = G_L + j \cdot B_L = 0.004S + j \cdot 0.004$$

$$y_L = g_L + j \cdot b_L = 0.2 - j \cdot 0.2$$

$$Y_{in} = Y_L + j \cdot B_1 = G_L + j \cdot (B_L + B_1)$$

$$y_{in} = g_L + j \cdot (b_L + b_1)$$

$$g_{in} = g_L$$

$$j \cdot b_1 = j \cdot \omega \cdot C_1 \cdot Z_0 > 0$$

$$j \cdot b_1 = -j \cdot Z_0 / \omega \cdot L_1 < 0$$

Diagrama Smith, coeficient de reflexie, conductanta in paralel

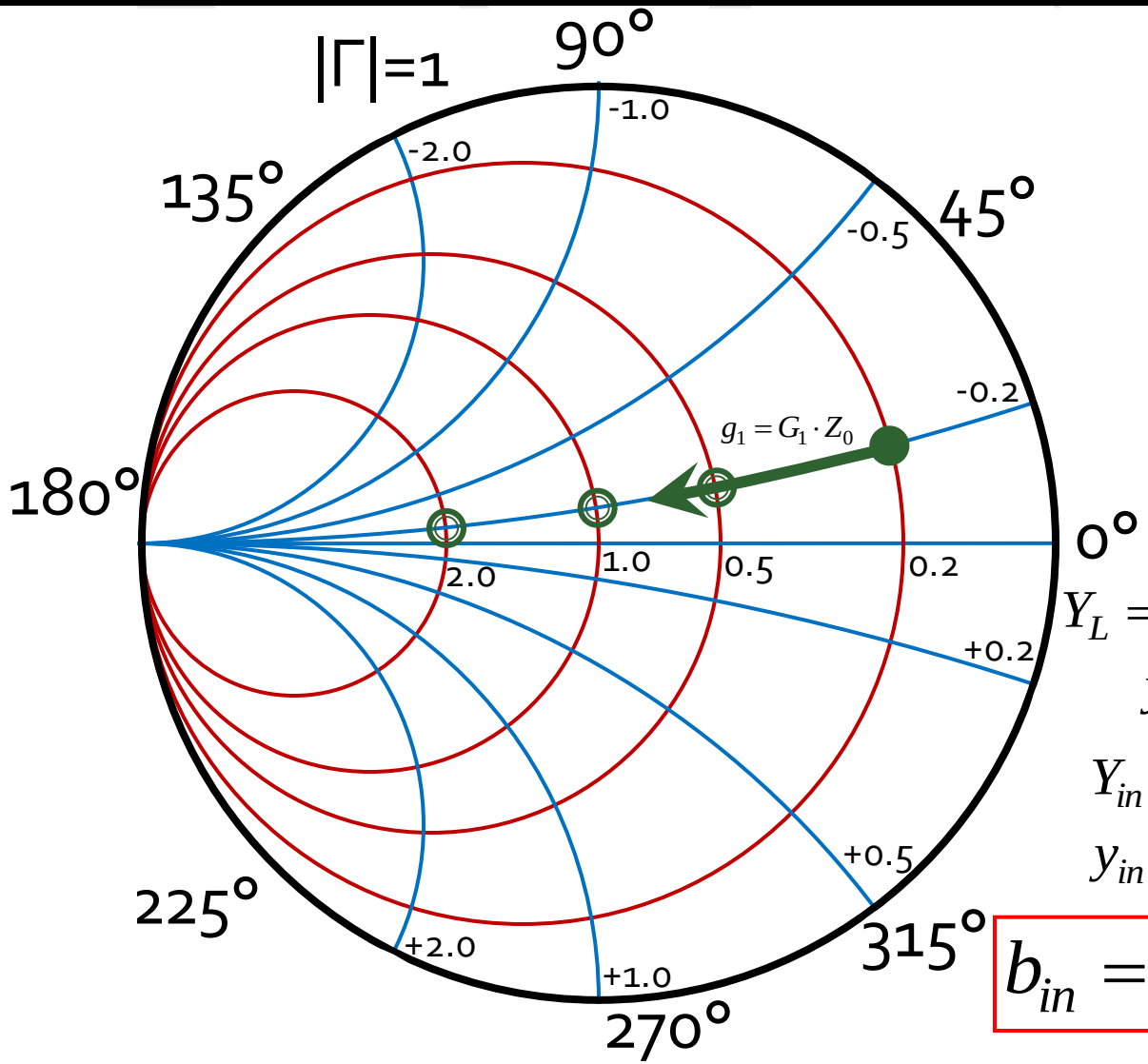

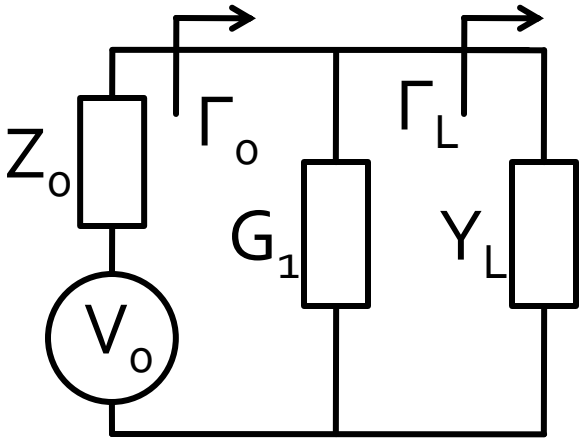

$Z_0 = 50\Omega, Y_0 = 0.02S$

$\Gamma_L = 0.678\angle 23.5°$

$Y_L = G_L + j \cdot B_L = 0.004S + j \cdot 0.004$

$y_L = g_L + j \cdot b_L = 0.2 - j \cdot 0.2$

$Y_{in} = Y_L + G_1 = (G_L + G_1) + j \cdot B_L$

$y_{in} = (g_L + g_1) + j \cdot b_L$

$\boxed{b_{in} = b_L}$

$g_{in} = g_L + G_1 \cdot Z_0$

Adaptarea cu transformatoare de impedanta (Lab. 1)

Adaptarea de impedanța

Transformatoare de impedanta

- Pentru adaptarea intre doua impedante **reale**
- Se realizeaza in functie de banda necesara cu una sau mai multe sectiuni de linie cu lungimea egala cu $\lambda/4$ la frecventa centrala:
  - Transformatorul in sfert de lungime de unda
  - Transformatorul binomial
  - Transformatorul Cebîşev

Adaptarea cu elemente concentrate (Retele in L)

Adaptarea de impedanța

Adaptare, reactanta in serie

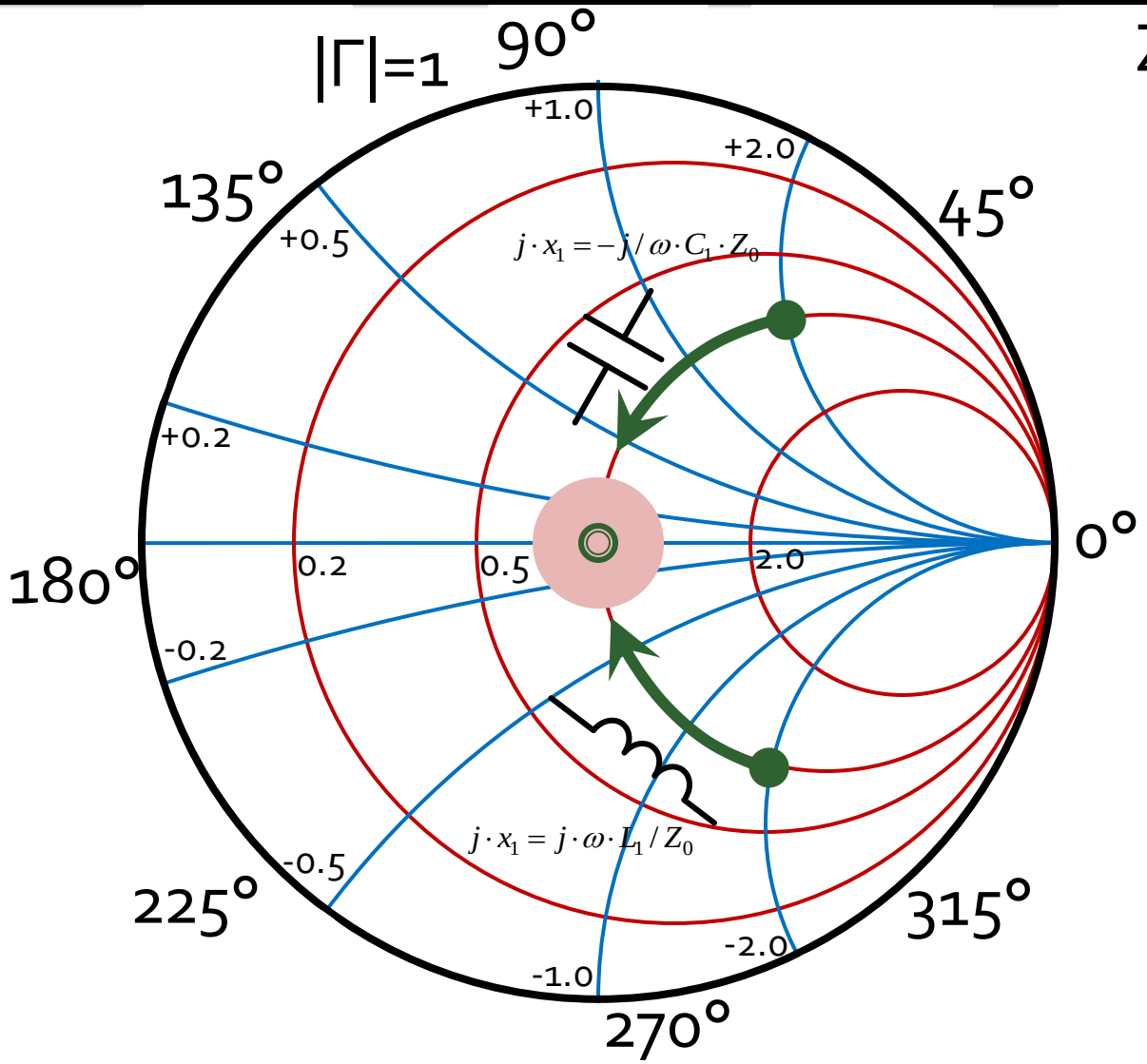

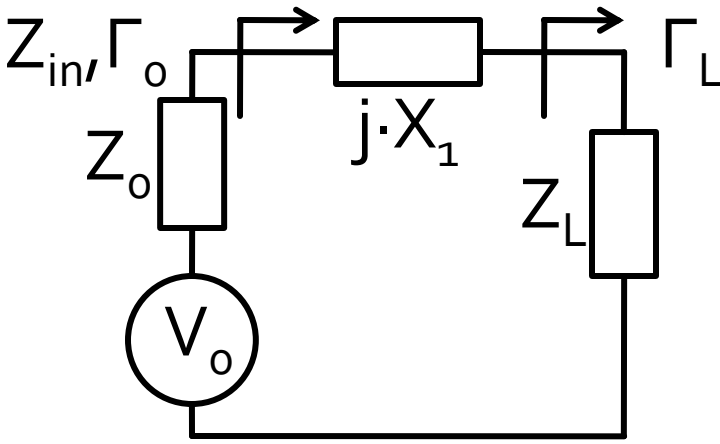

$$z_L = r_L + j \cdot x_L$$

$$z_{in} = r_L + j \cdot (x_L + x_1)$$

$$r_{in} = r_L$$

- Adaptarea se poate realiza numai daca $r_L = 1$
- se realizeaza compensarea partii reactive a sarcinii

$$j \cdot x_1 = -j \cdot x_L$$

Adaptare, susceptanta in paralel

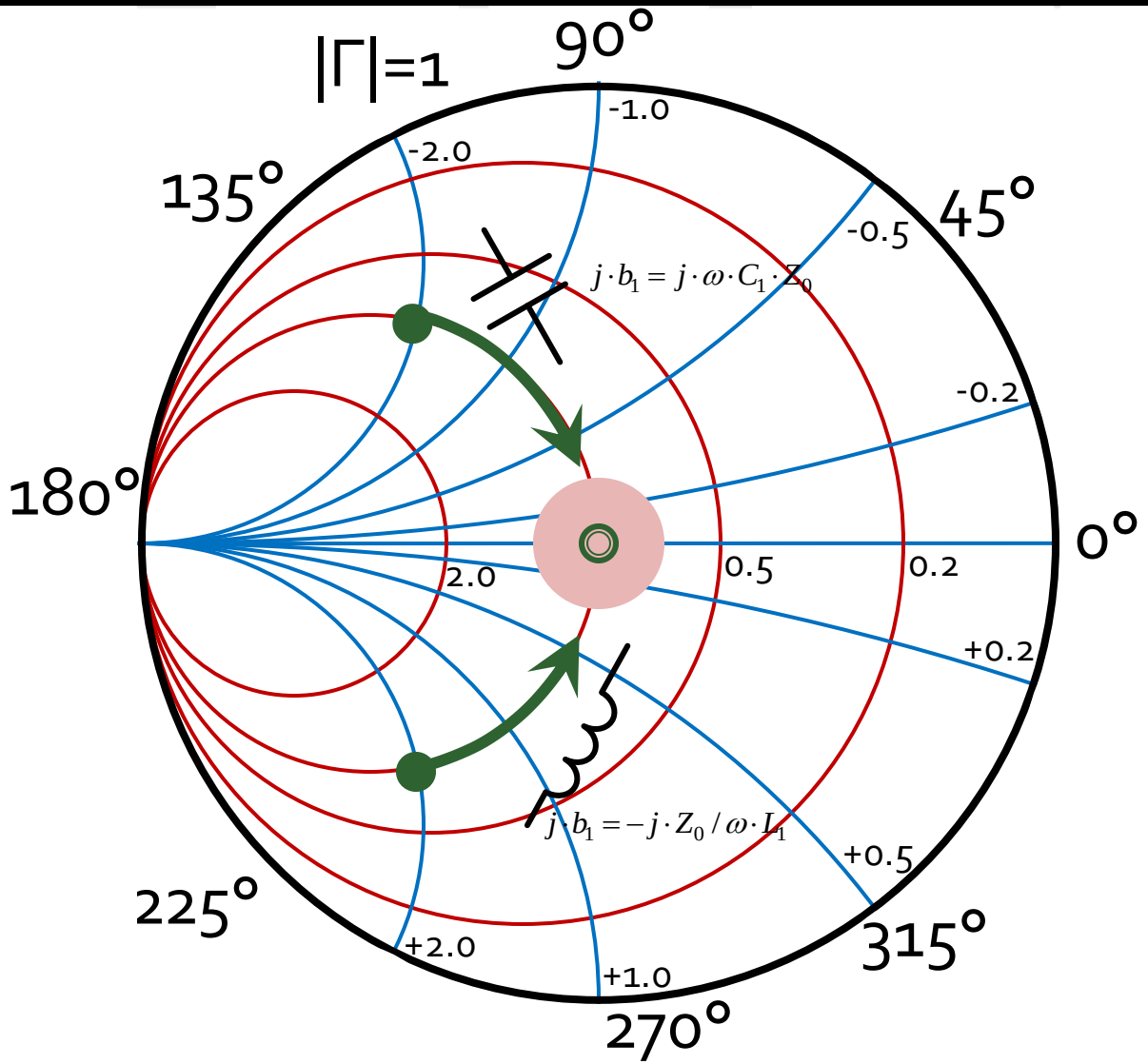

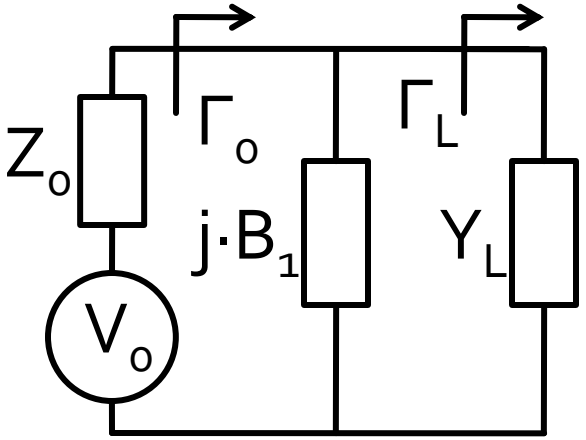

$$y_L = g_L + j \cdot b_L$$

$$y_{in} = g_L + j \cdot (b_L + b_1)$$

$$g_{in} = g_L$$

- Adaptarea se poate realiza numai daca $g_L = 1$
- se realizeaza compensarea partii reactive a sarcinii

$$j \cdot b_1 = -j \cdot b_L$$

Adaptare cu doua elemente reactive (retele in L)

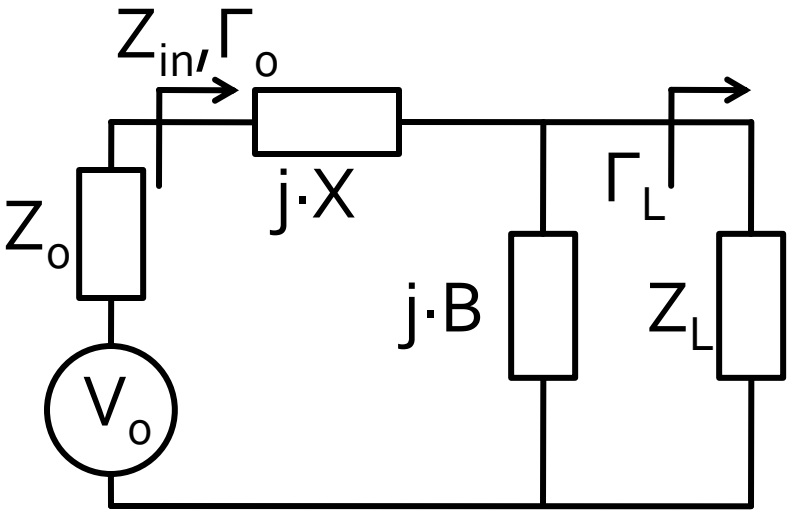

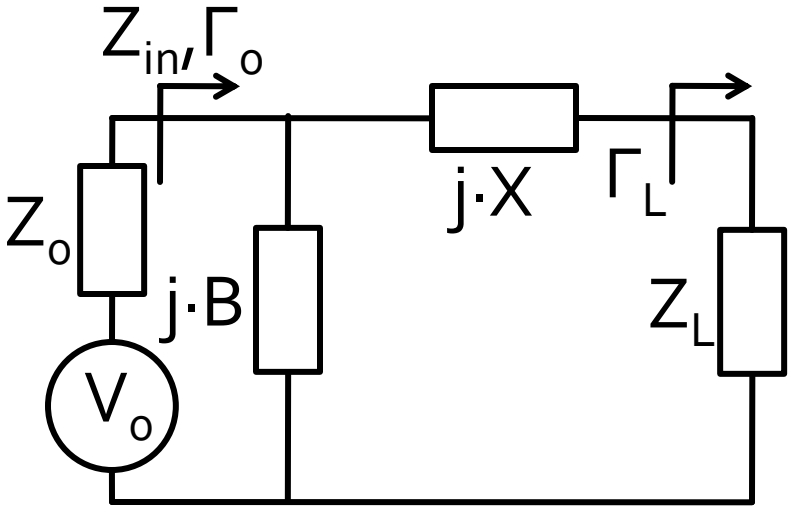

- Adaptare in doi pasi
  - un prim element muta coeficientul de reflexie pe cercul $r_L = 1/g_L = 1$
  - al doilea element realizeaza adaptarea

C serie, C paralel / C paralel, C serie

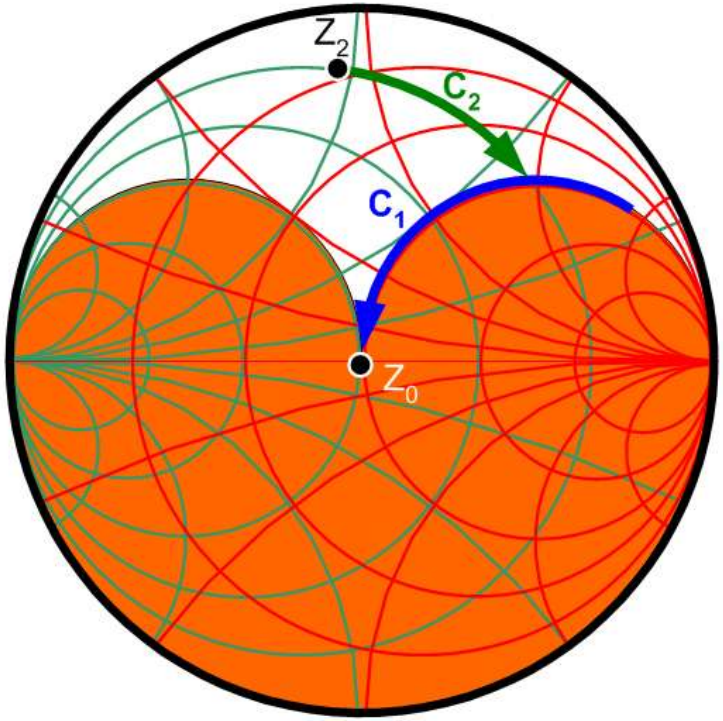

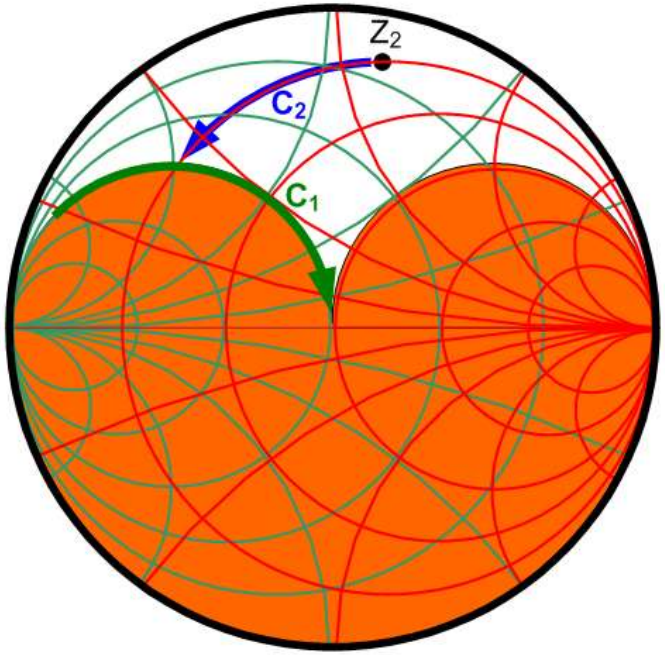

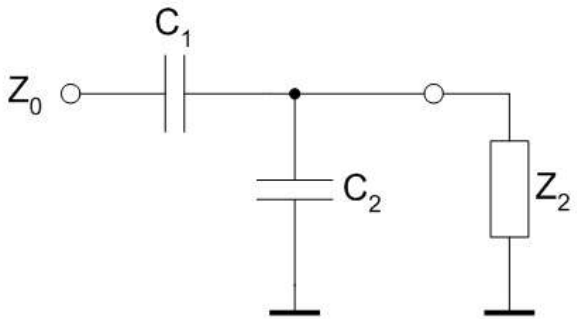

Zona interzisa cu schema curenta

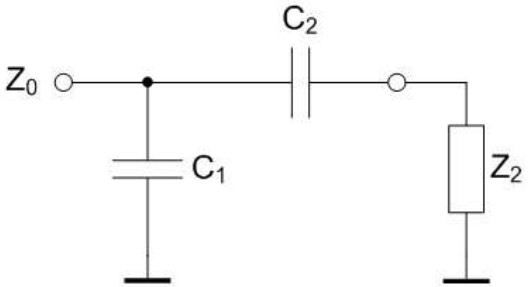

L serie, L paralel / L paralel, L serie

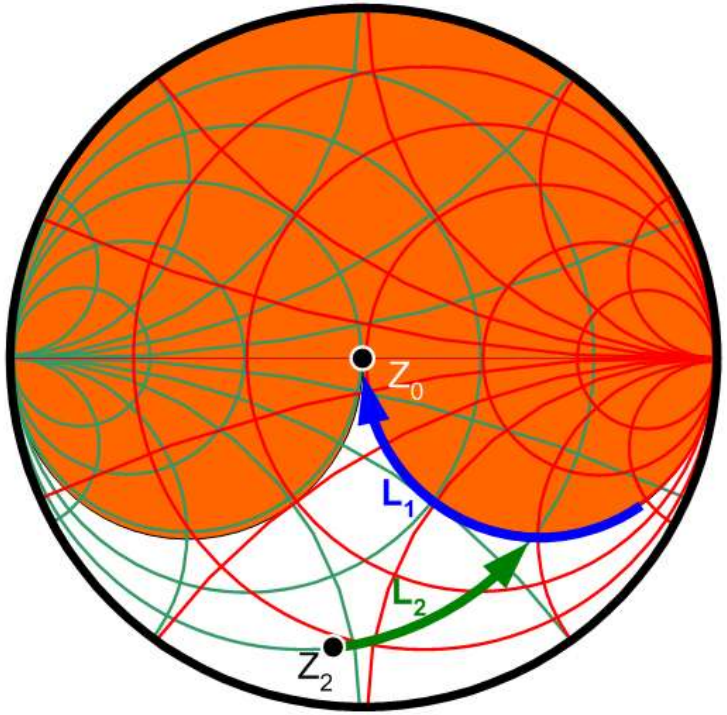

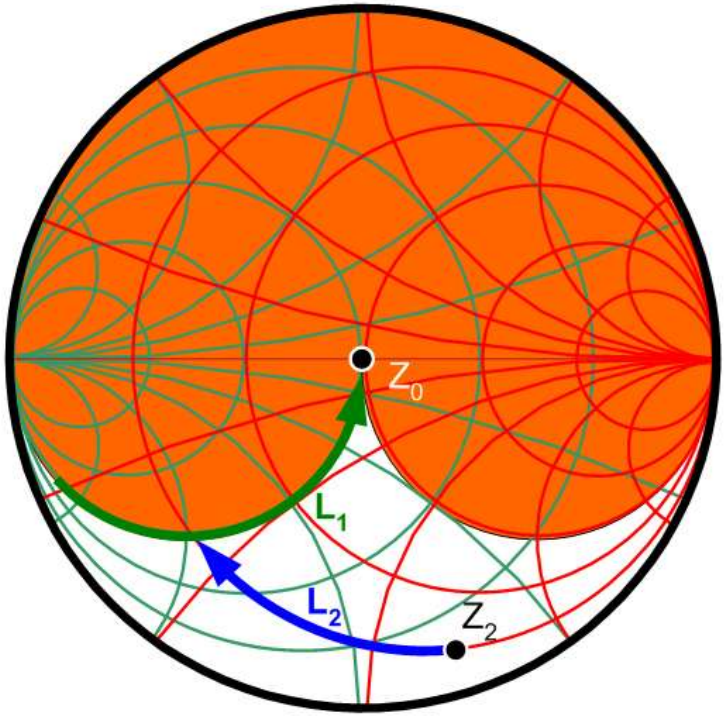

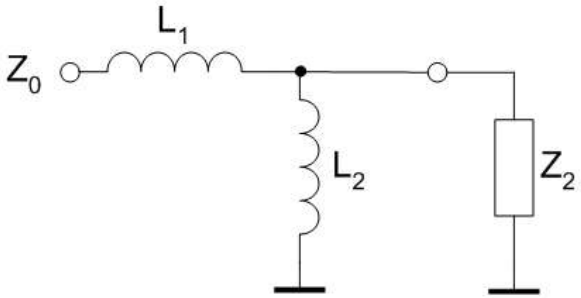

Zona interzisa cu schema curenta

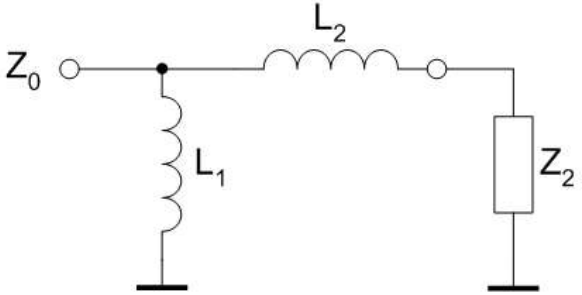

L serie, C paralel / C paralel, L serie

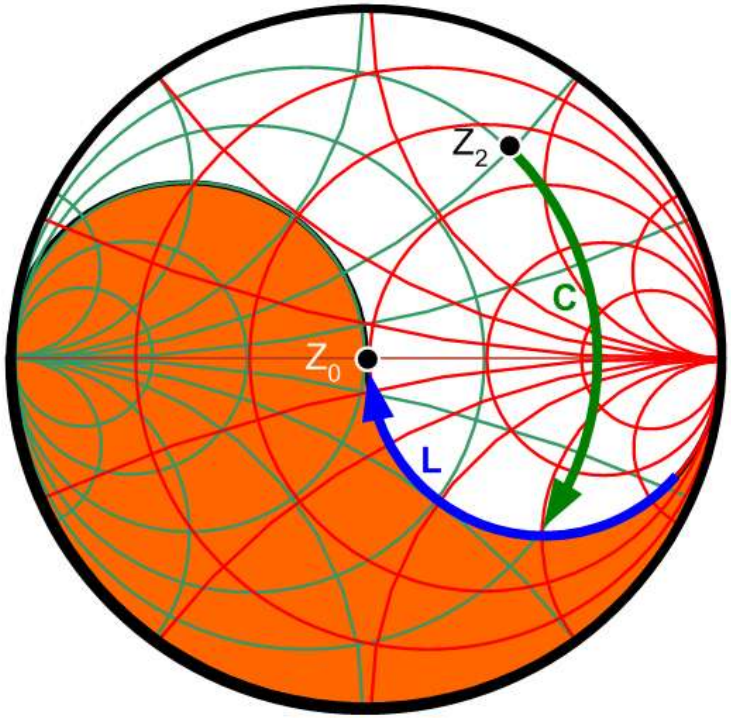

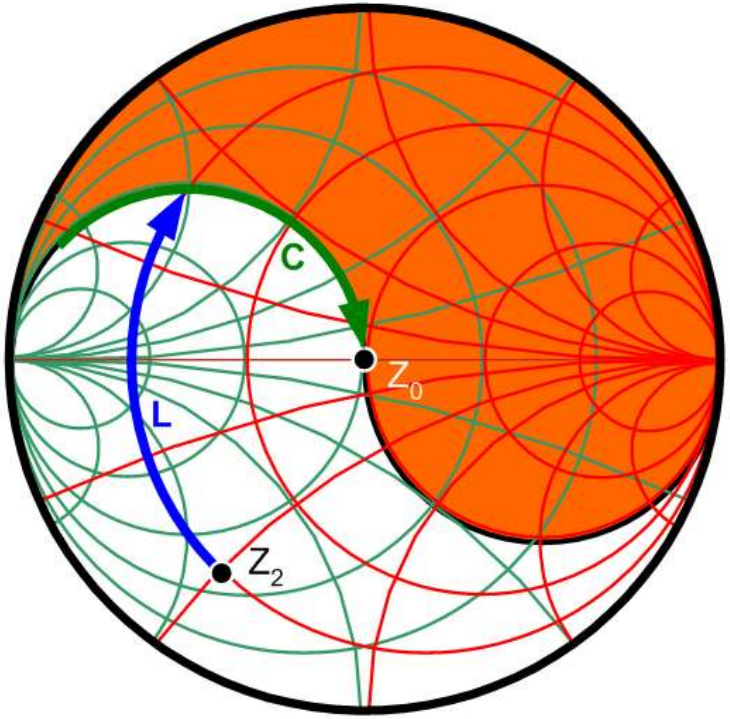

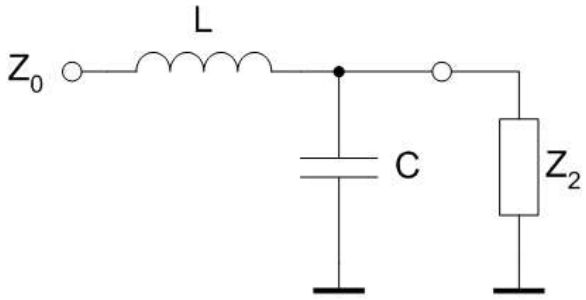

Zona interzisa cu schema curenta

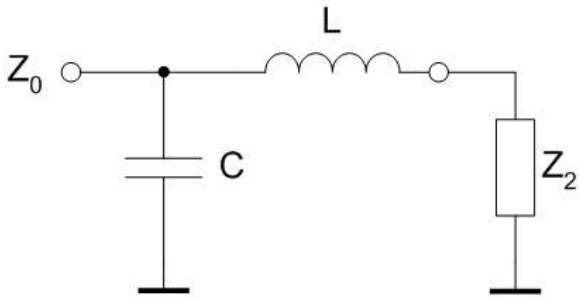

C serie, L paralel / L paralel, C serie

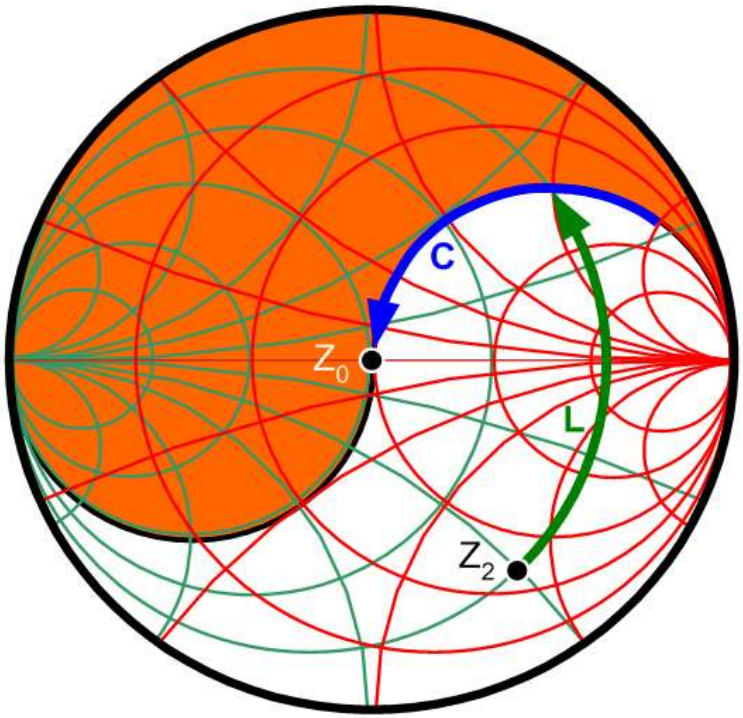

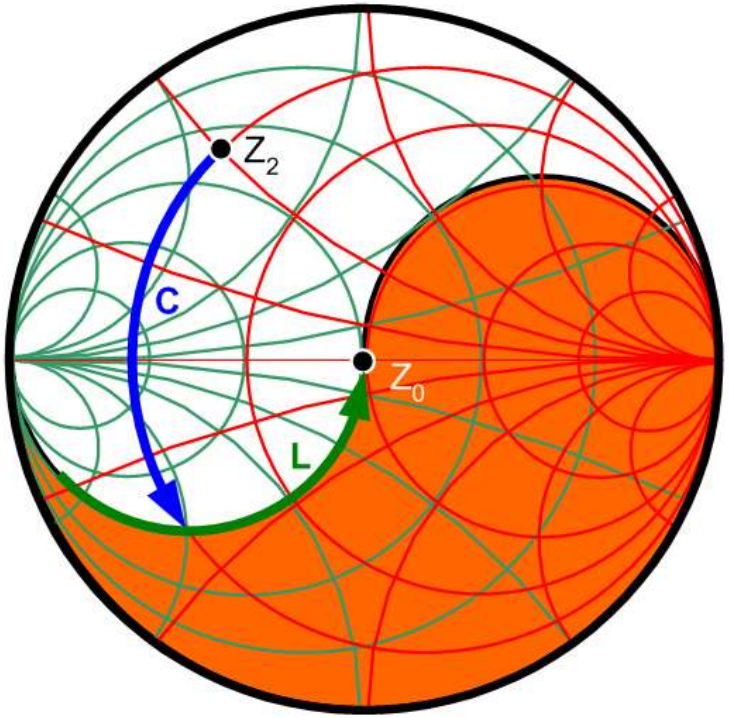

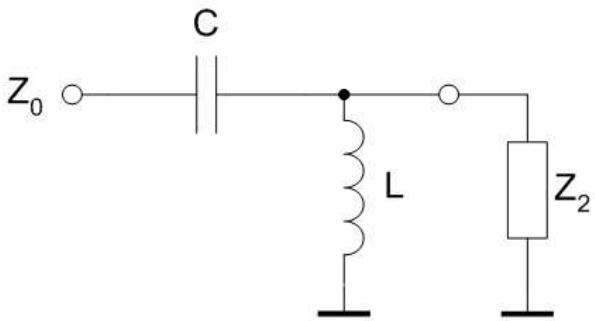

Zona interzisa cu schema curenta

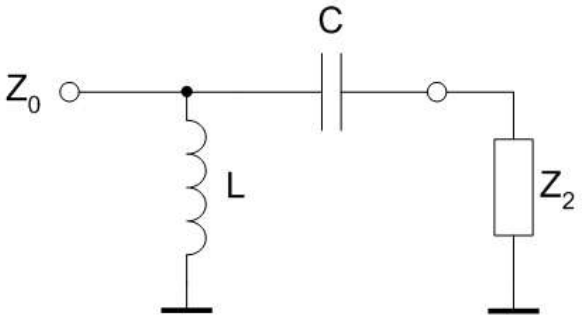

Adaptare cu doua elemente reactive (retele in L)

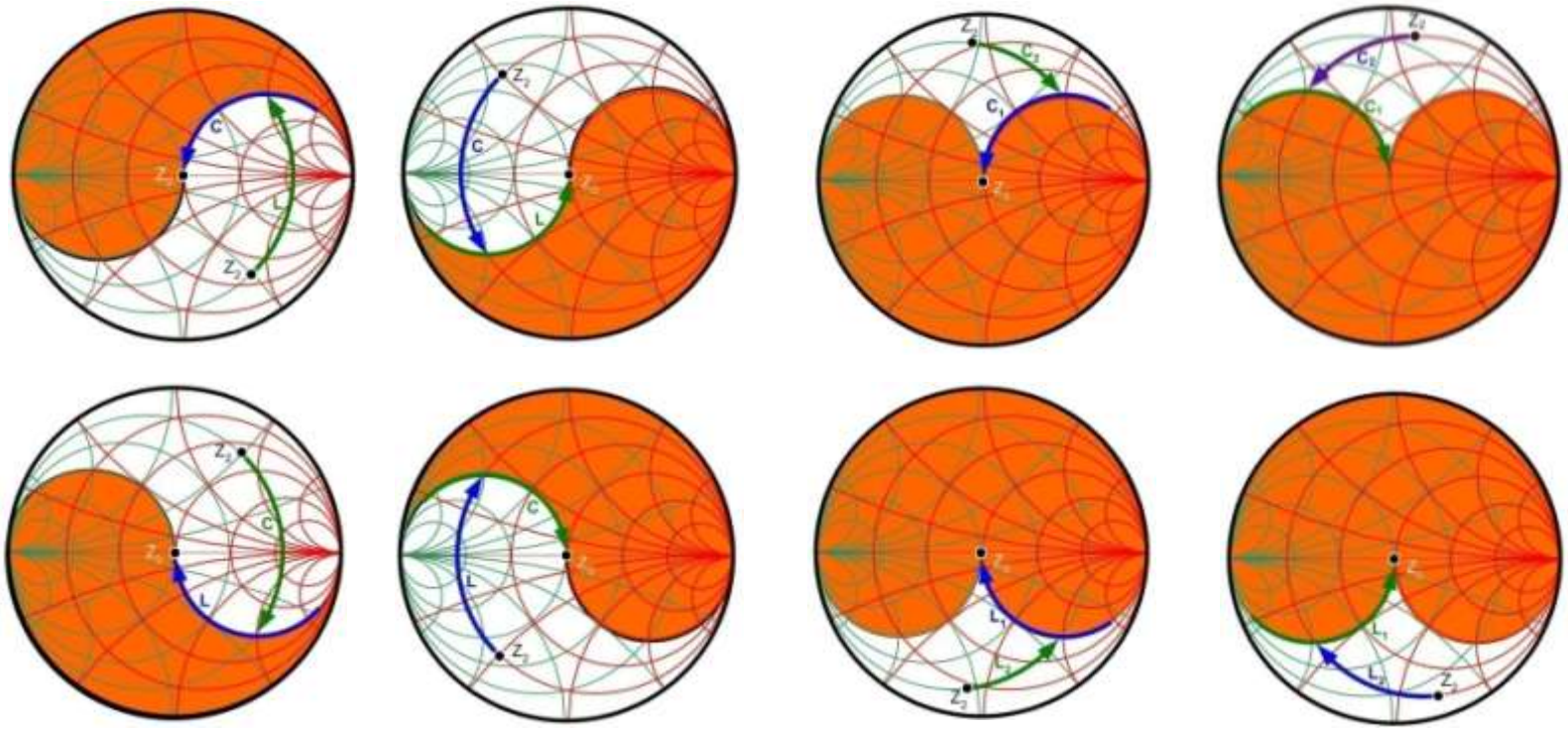

Zona interzisa cu schema curenta

Adaptare cu doua elemente reactive (retele in L)

- Pentru orice Γ_L exista cel putin 2 retele in L de adaptare posibile (L+C)
- Pentru anumite zone de start de pe diagrama Smith exista 4 posibilitati (+2 retele C+C/L+L)
- Se alege reteaua care necesita componente de valori realizabile
- Prin adaugarea elementelor rezistive se pot suplimenta retelele posibile cu **pierdere de putere (nerecomandat)**

Adaptare cu elemente rezistive

- Circuitele active lucreaza in zona frecventei unitare
- Orice "risipa" de putere este **nerecomandata**
- Exista situatii in care este **necesara** o astfel de actiune pentru asigurarea stabilitatii

Adaptare cu doua elemente reactive (retele in L)

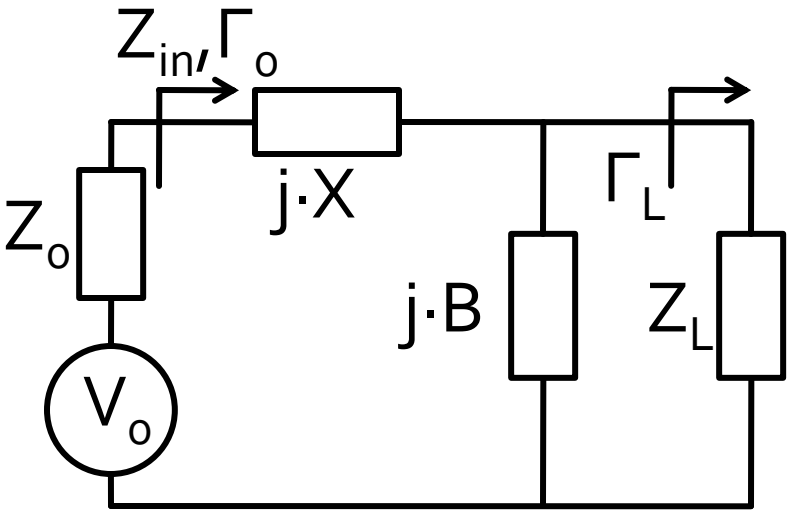

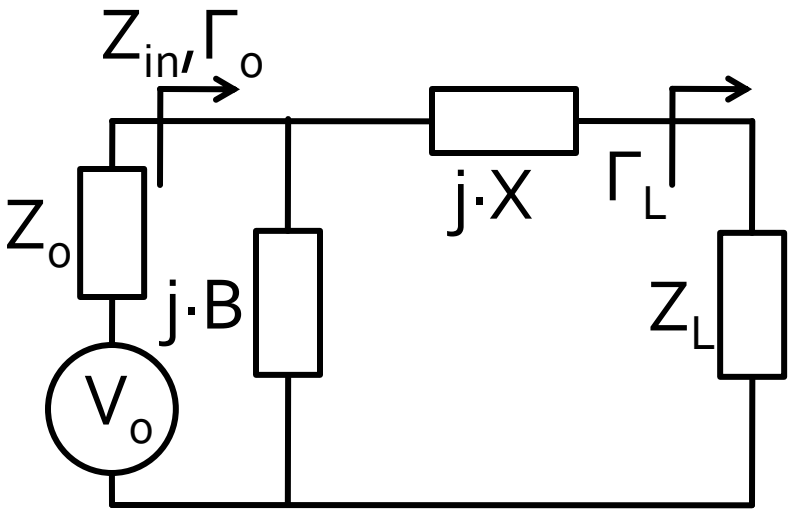

- Adaptare in doi pasi
  - pentru elementele situate in interiorul cercului $r_L = 1$ se utilizeaza prima schema
  - pentru elementele situate in exteriorul cercului $r_L = 1$ se utilizeaza a doua schema

Adaptare cu doua elemente reactive (retele in L)

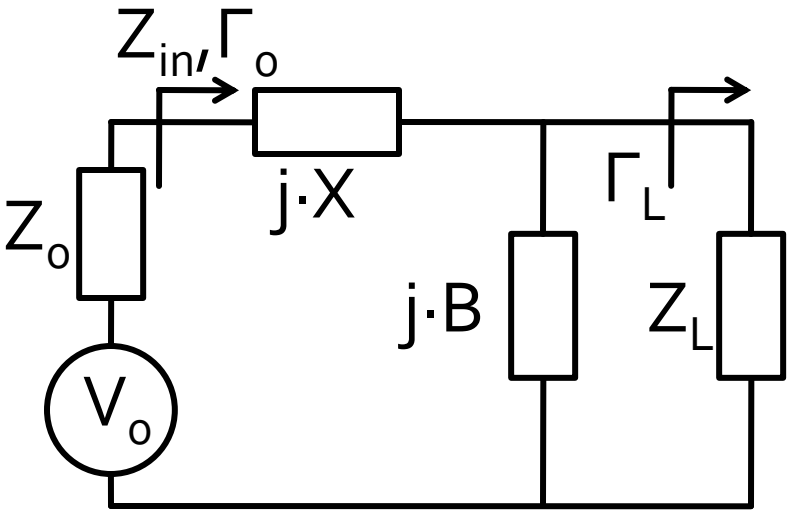

$$Z_L = R_L + j \cdot X_L \qquad R_L > Z_0 \qquad Z_{in} = Z_0$$

$$Z_0 = j \cdot X + \frac{1}{j \cdot B + 1/(R_L + j \cdot X_L)}$$

$$\begin{cases} B \cdot (X \cdot R_L - X_L \cdot Z_0) = R_L - Z_0 \\ X \cdot (1 - B \cdot X_L) = B \cdot Z_0 \cdot R_L - X_L \end{cases}$$

$$B = \frac{X_L \pm \sqrt{R_L / Z_0} \cdot \sqrt{R_L^2 + X_L^2 - Z_0 \cdot R_L}}{R_L^2 + X_L^2}$$

$$X = \frac{1}{B} + \frac{X_L \cdot Z_0}{R_L} - \frac{Z_0}{B \cdot R_L}$$

- valoarea de sub radical e intotdeauna pozitiva pentru

$$R_L > Z_0$$

- se obtin doua solutii realizabile

Adaptare cu doua elemente reactive (retele in L)

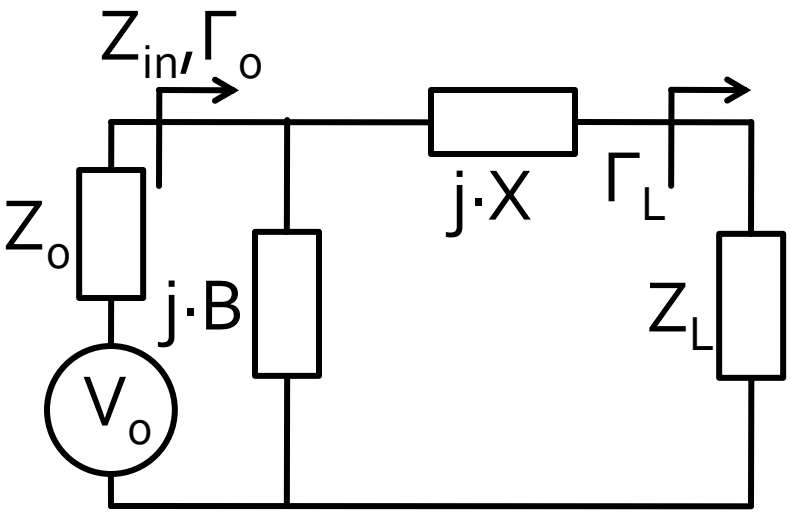

$$Z_L = R_L + j \cdot X_L \qquad R_L < Z_0 \qquad Y_{in} = Y_0 = \frac{1}{Z_0}$$

$$\frac{1}{Z_0} = j \cdot B + \frac{1}{R_L + j \cdot (X + j \cdot X_L)}$$

$$\begin{cases} B \cdot Z_0 \cdot (X + X_L) = Z_0 - R_L \\ (X + X_L) = B \cdot Z_0 \cdot R_L \end{cases}$$

$$X = \pm\sqrt{R_L \cdot (Z_0 - R_L)} - X_L$$

$$B = \pm\frac{\sqrt{(Z_0 - R_L)/R_L}}{Z_0}$$

- valoarea de sub radical e intotdeauna pozitiva pentru

$$R_L < Z_0$$

- se obtin doua solutii realizabile

Exemplu

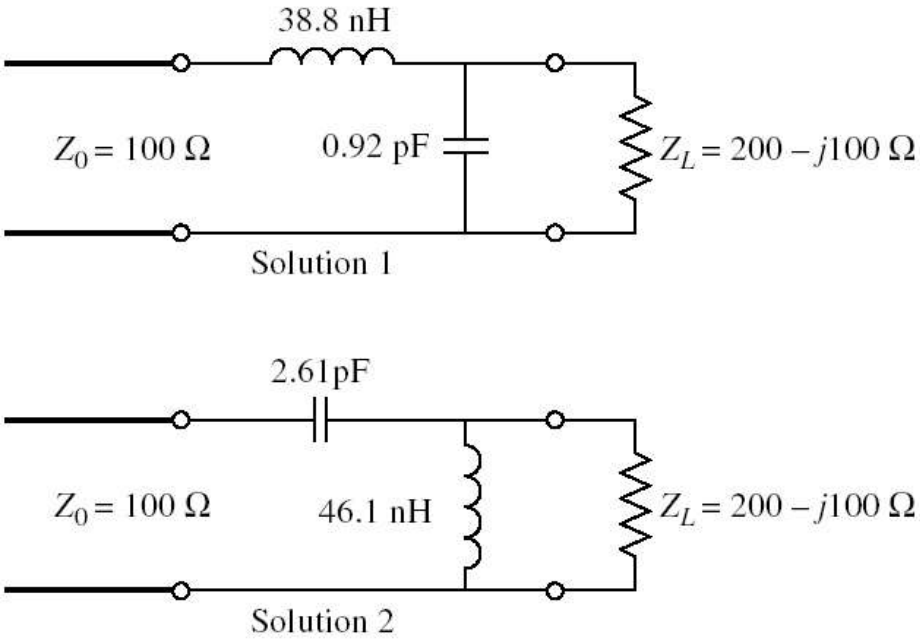
38.8 nH
$Z_0 = 100\ \Omega$
0.92 pF
$Z_L = 200 - j100\ \Omega$
Solution 1
2.61pF
$Z_0 = 100\ \Omega$
46.1 nH
$Z_L = 200 - j100\ \Omega$
Solution 2

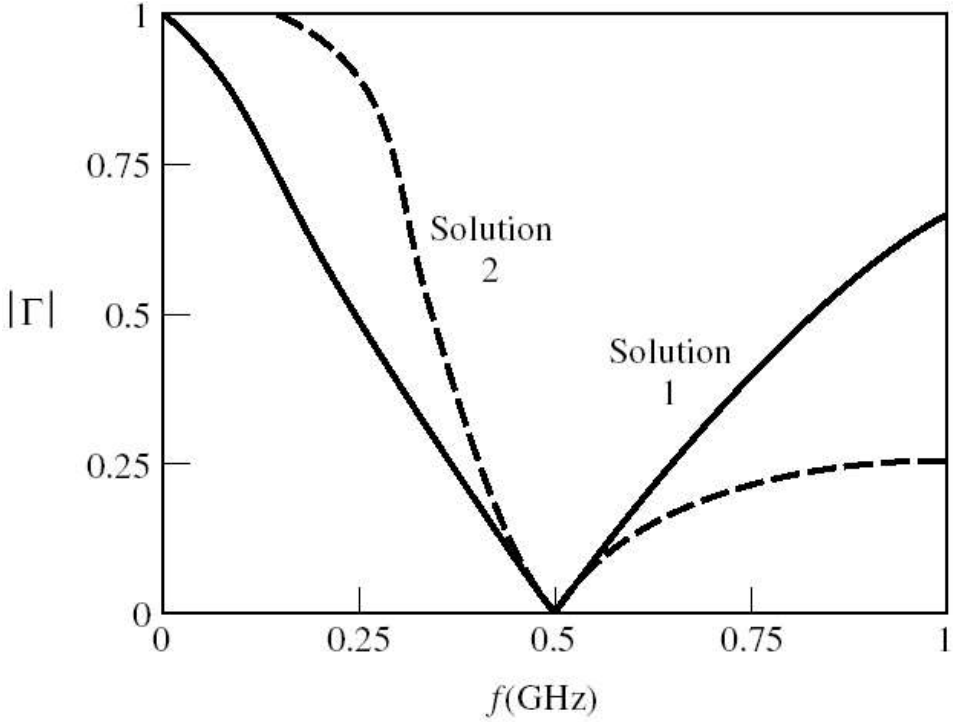
1
0.75
0.5
0.25
0
$|\Gamma|$
Solution 2
Solution 1
0
0.25
0.5
0.75
1
f(GHz)

Realizare elemente concentrate

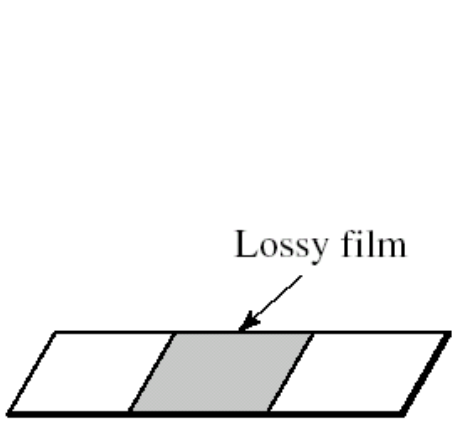

Planar resistor

Chip resistor

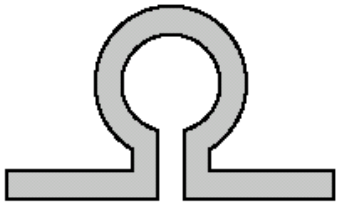

Loop inductor

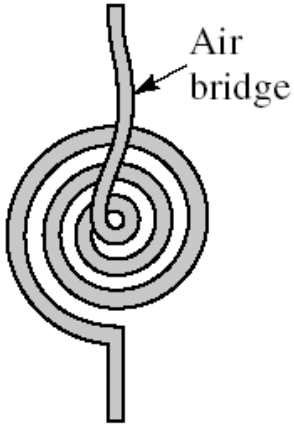

Spiral inductor

Interdigital
gap capacitor

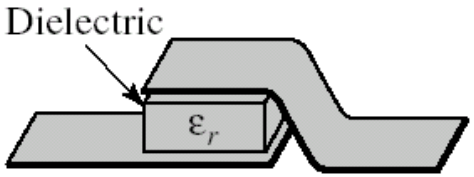

Metal-insulator-
metal capacitor

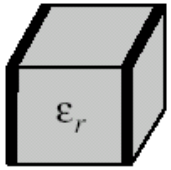

Chip capacitor

Adaptarea cu sectiuni de linii (stub)

Adaptarea de impedanța

Stub

- stub=rest, ciot, cotor, **capăt**
- Se evita utilizarea elementelor concentrate
- Se realizează (foarte precis) utilizând liniile de transmisie uzuale ale circuitului
- Se utilizează secțiuni de linie (stub-uri) in serie sau paralel care pot fi:
  - in gol
  - scurtcircuitate
- De obicei liniile in gol sunt mai ușor de implementat si sunt preferate

Single stub tuning

- Shunt Stub (sectiune de linie in paralel)

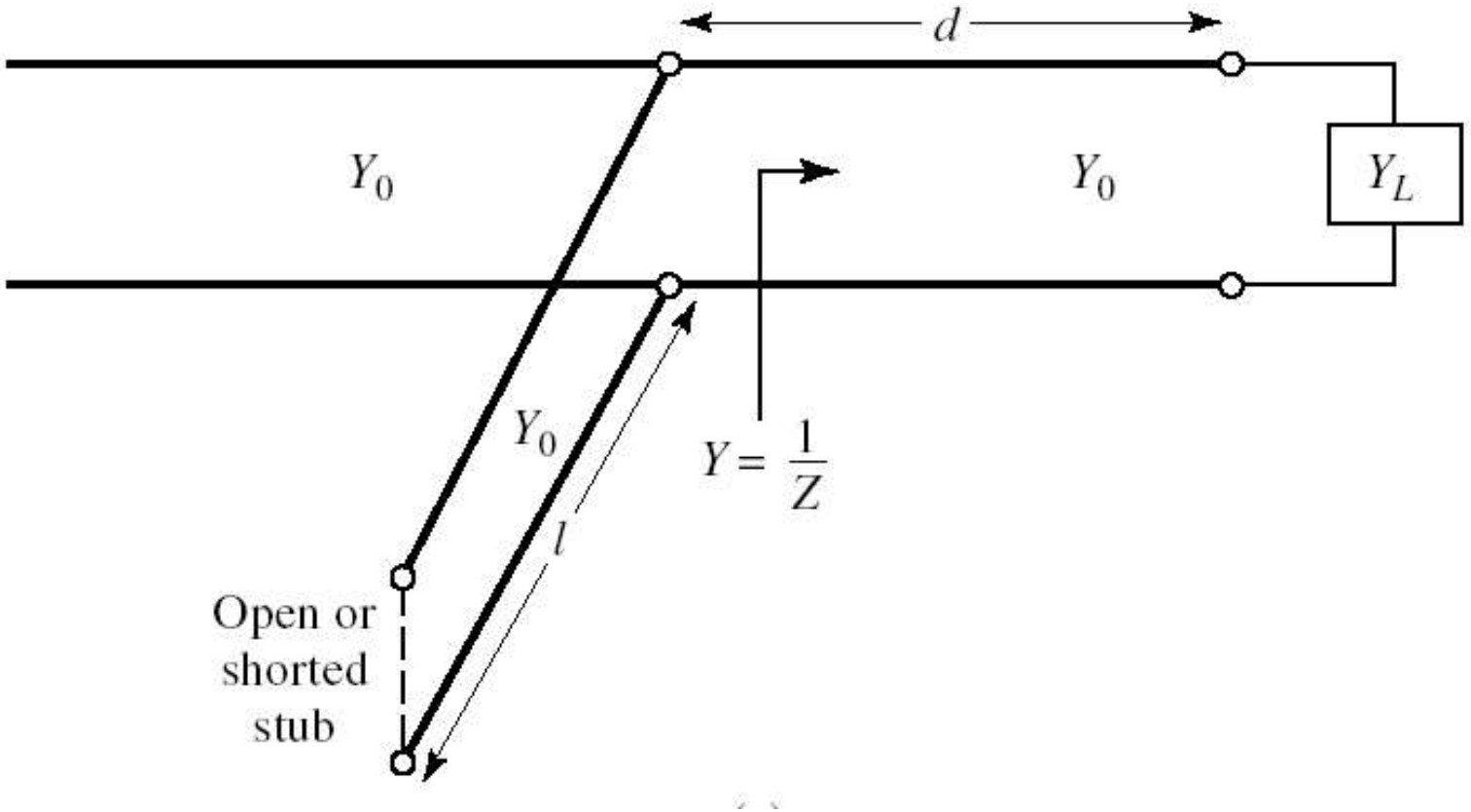

Single stub tuning

- Series Stub (sectiune de linie in serie)
- tehnologic mai dificil de realizat la liniile monofilare (microstrip)

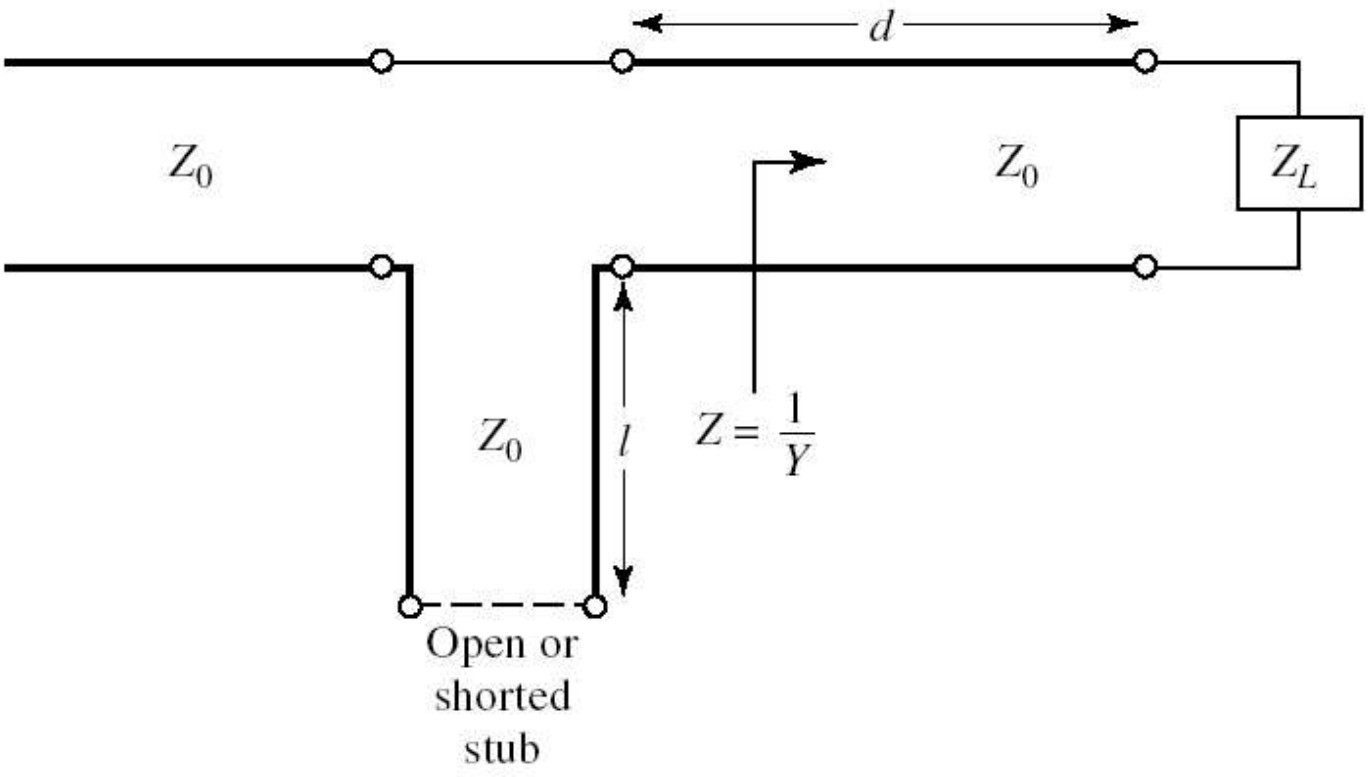

Adaptare, linie serie + susceptanta in paralel

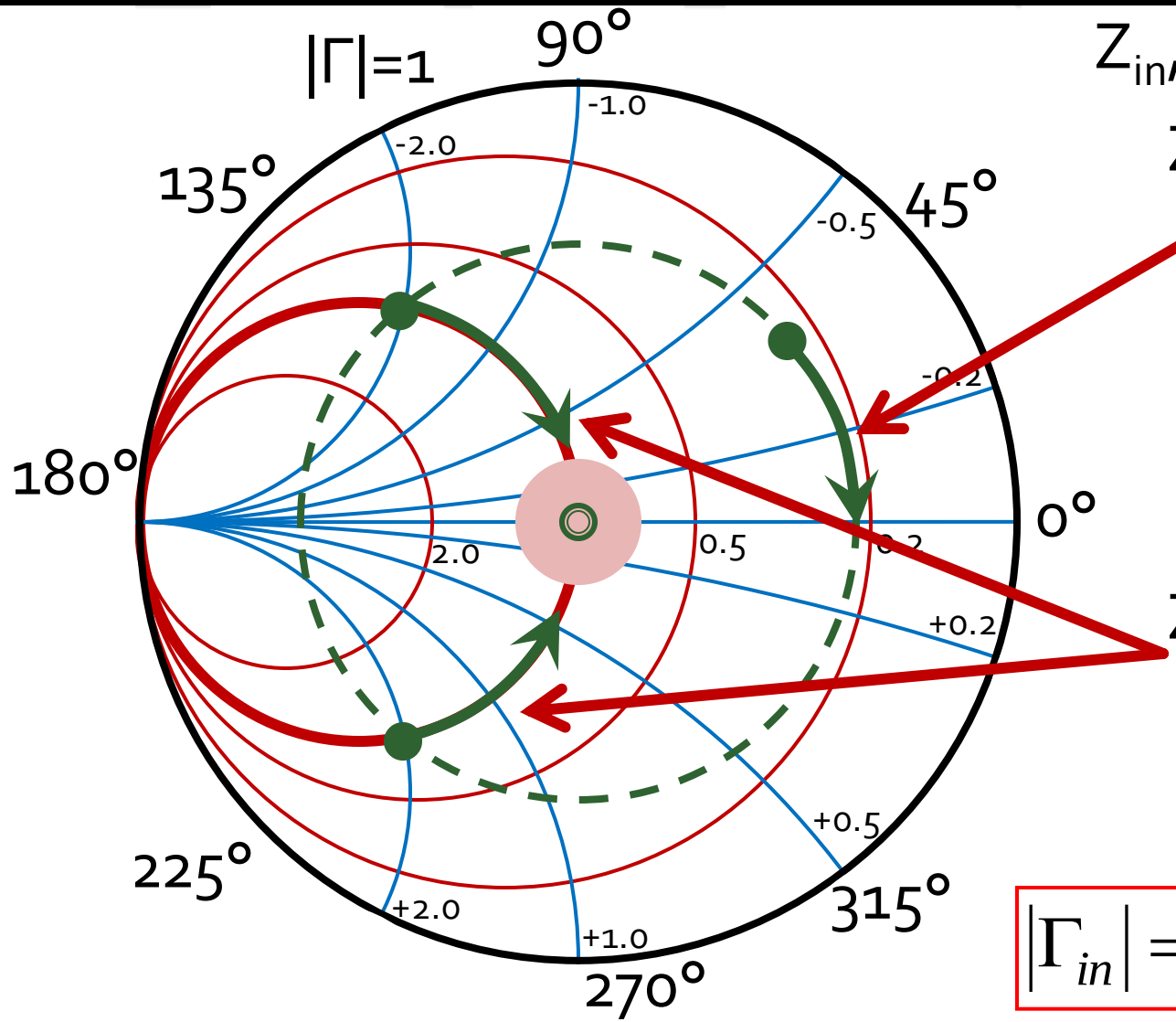

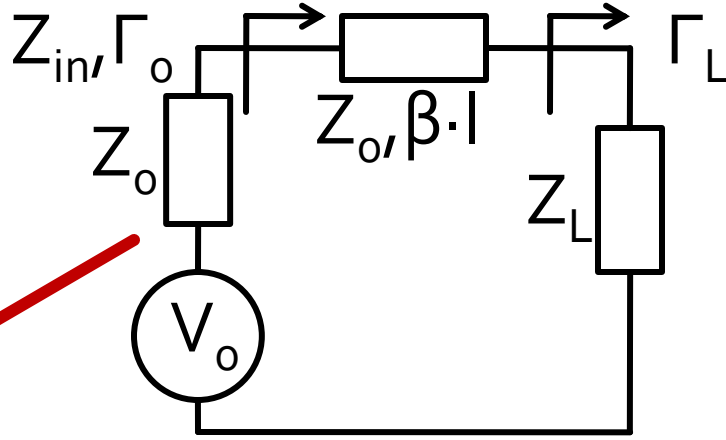

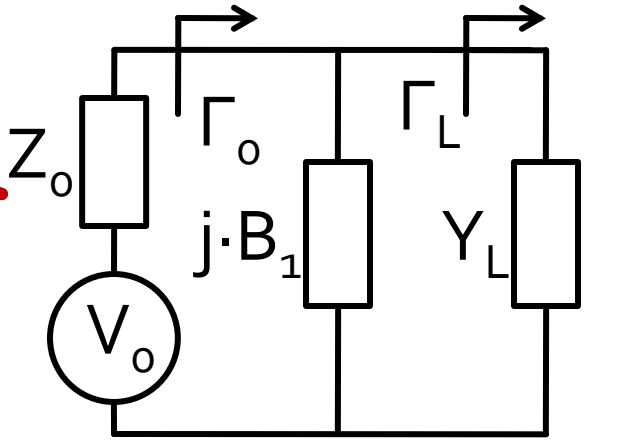

$$|\Gamma_{in}| = |\Gamma_L|$$

$$g_{in} = 1$$

Caz 1, Shunt Stub

- Shunt Stub (sectiune de linie in paralel)

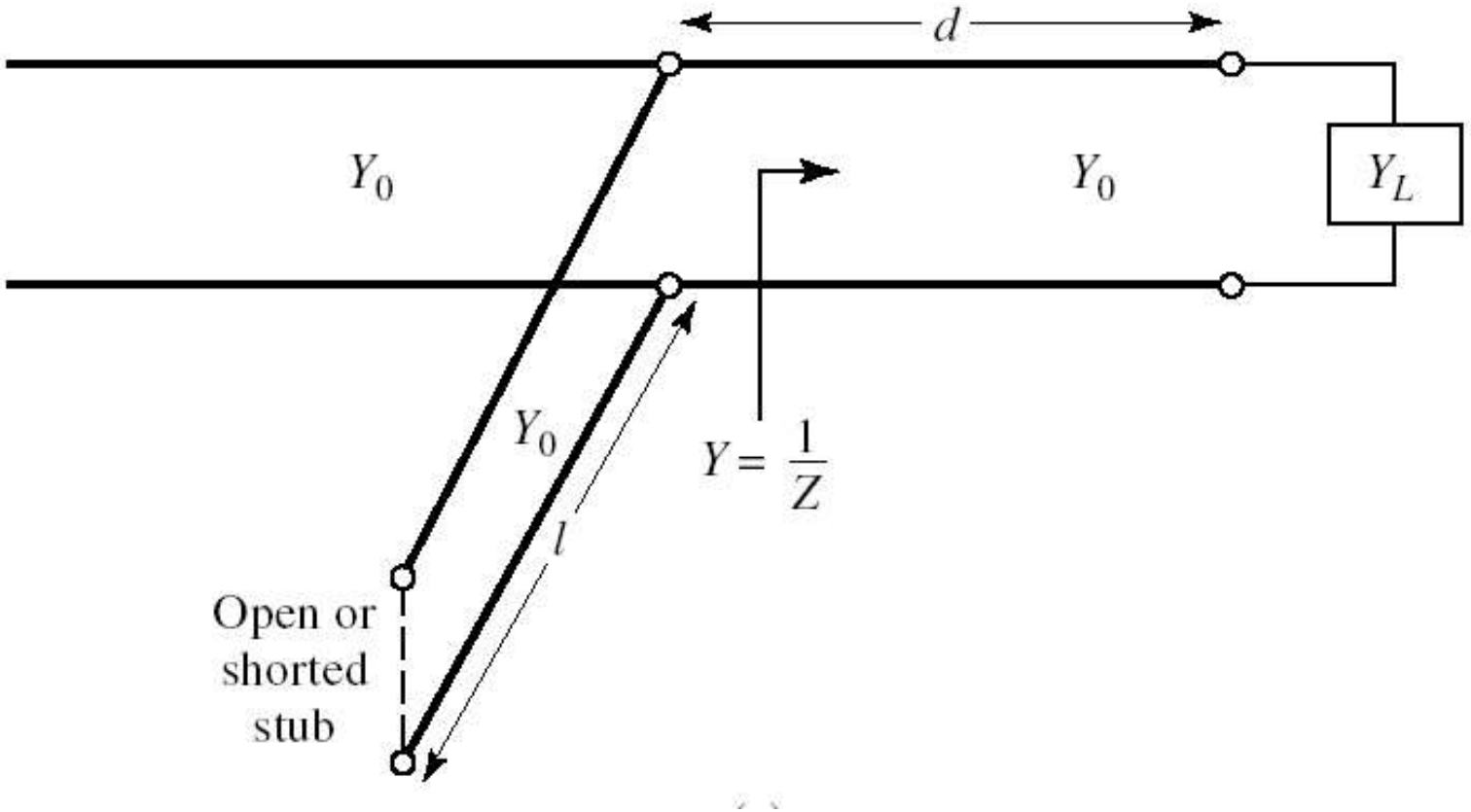

Caz 1, Shunt Stub

- Se utilizeaza o linie de transmisie serie pentru a muta coeficientul de reflexie pe cercul $g_L = 1$
- Se introduce o reactanta in paralel pentru a realiza adaptarea
- Aceasta reactanta se realizeaza cu o linie de transmisie care poate fi dupa nevoie:
  - in gol
  - in scurtcircuit

$$Z_{in} = Z_0 \cdot \frac{Z_L + j \cdot Z_0 \cdot \tan \beta \cdot l}{Z_0 + j \cdot Z_L \cdot \tan \beta \cdot l}$$

$$Z_{in,sc} = j \cdot Z_0 \cdot \tan \beta \cdot l \qquad Z_{in,g} = -j \cdot Z_0 \cdot \cot \beta \cdot l$$

Exemplu, Shunt Stub, sc

- sarcina: 60 Ω serie 0.995 pF
- doua solutii posibile

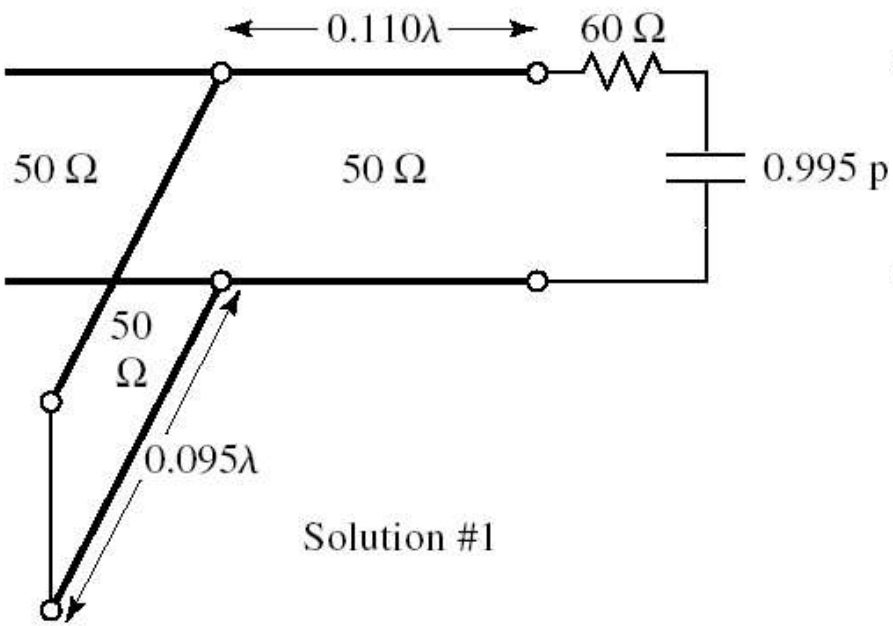

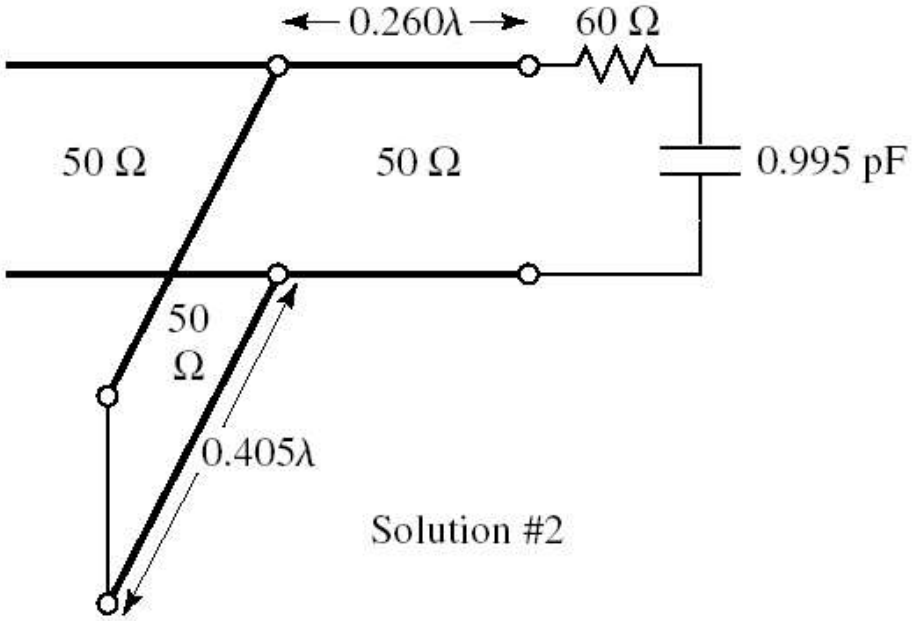

Exemplu, Shunt Stub, sc

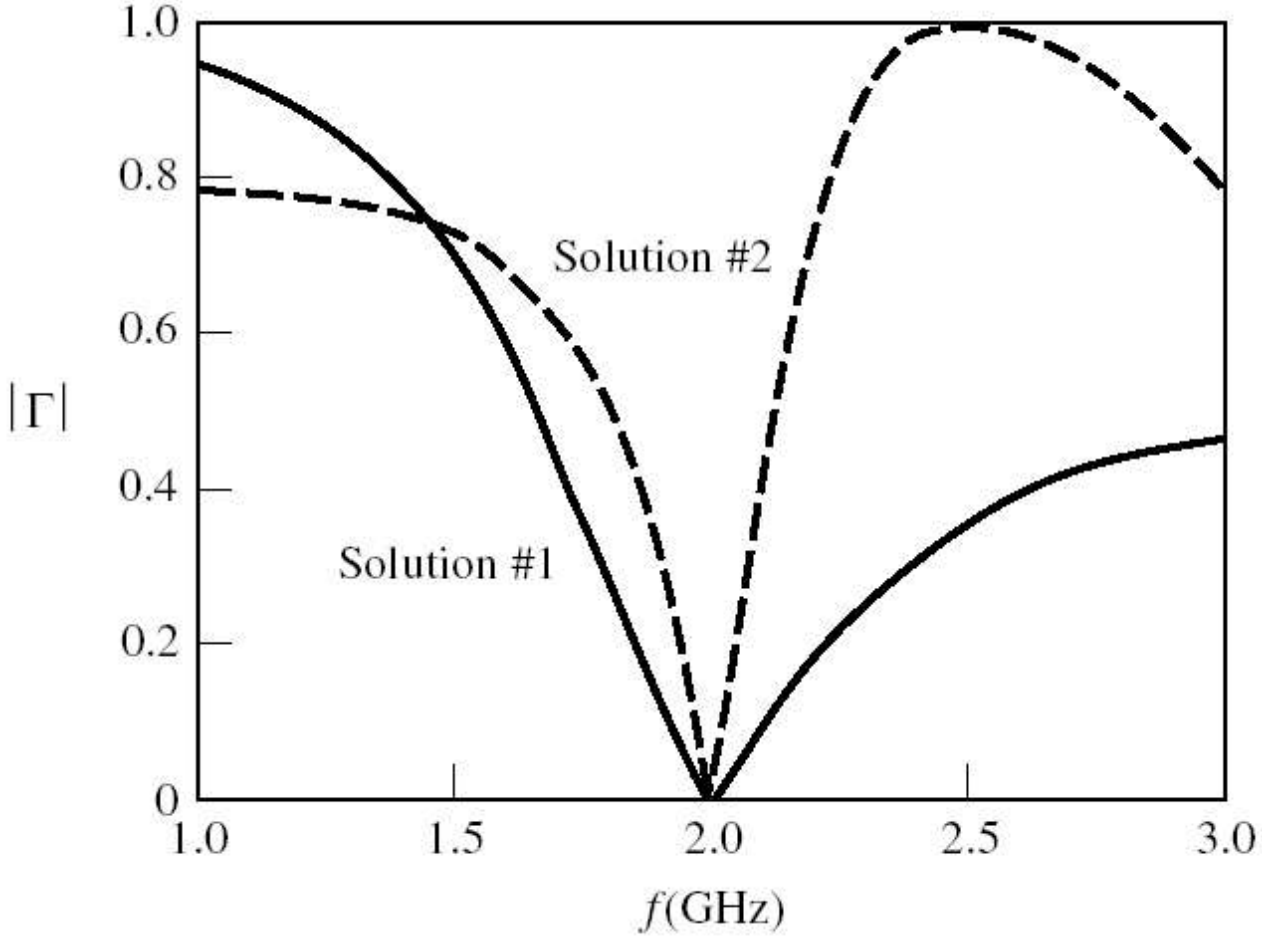

Exemplu, Shunt Stub, sc

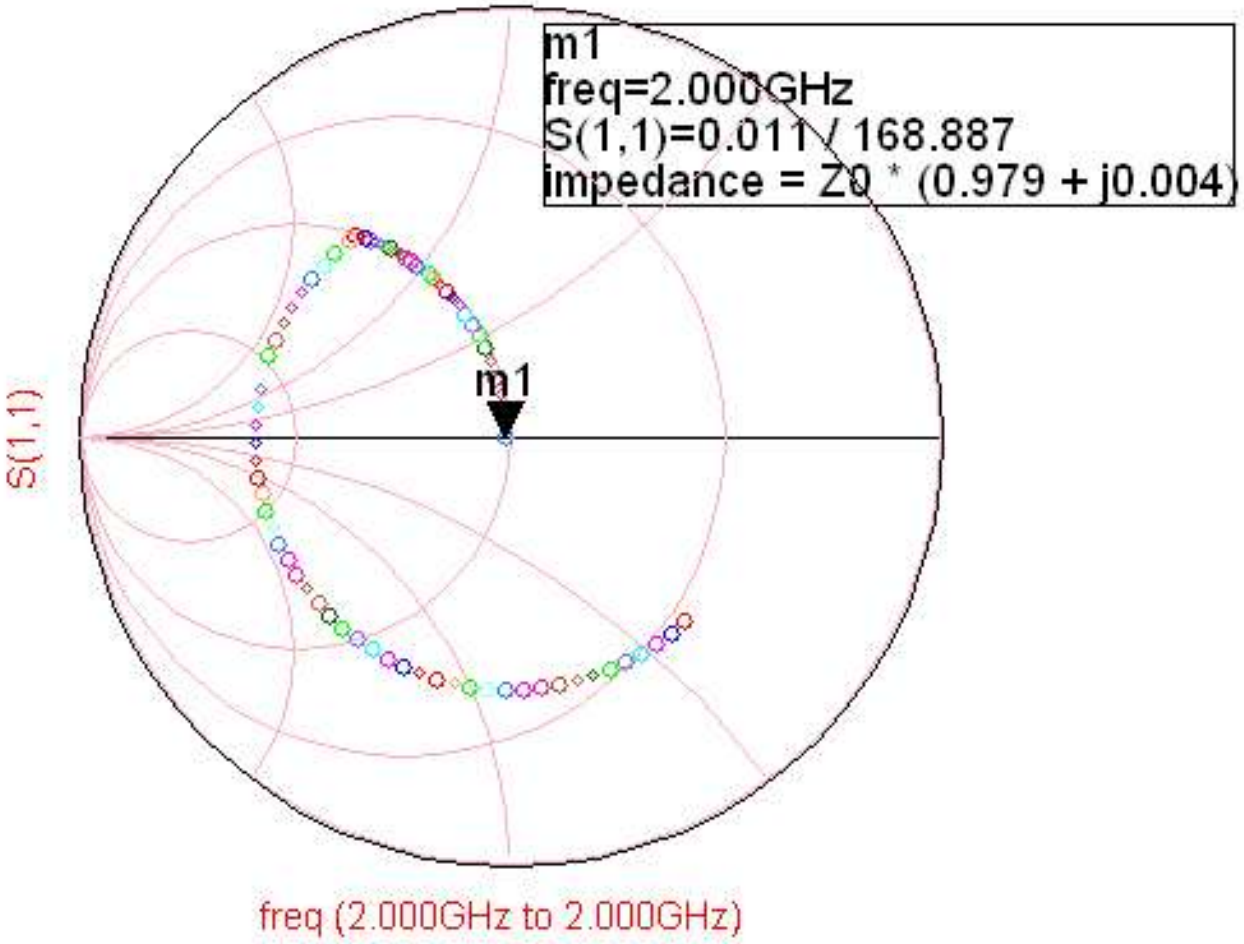

Exemplu, Shunt Stub, sc

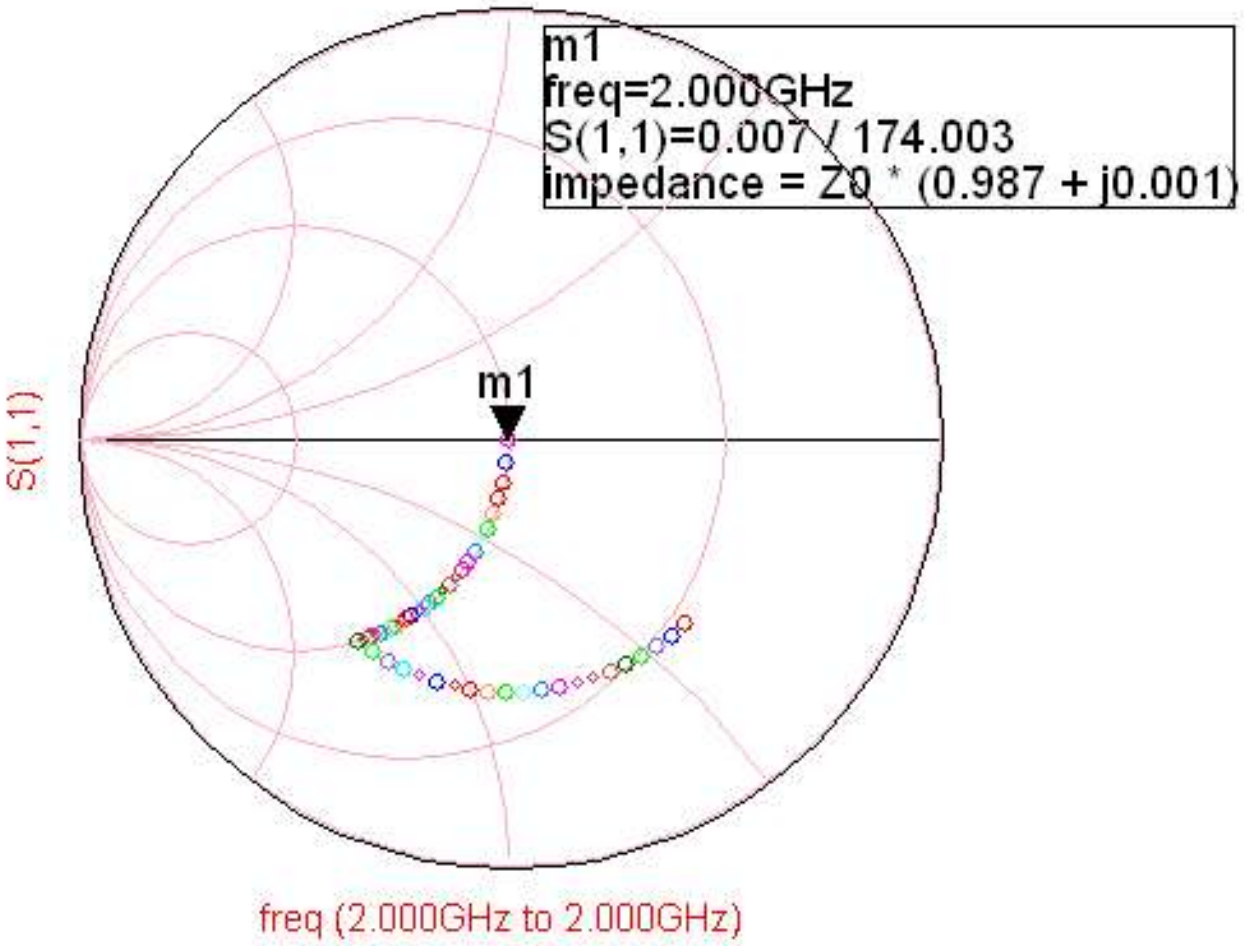

Exemplu, Shunt Stub, sc

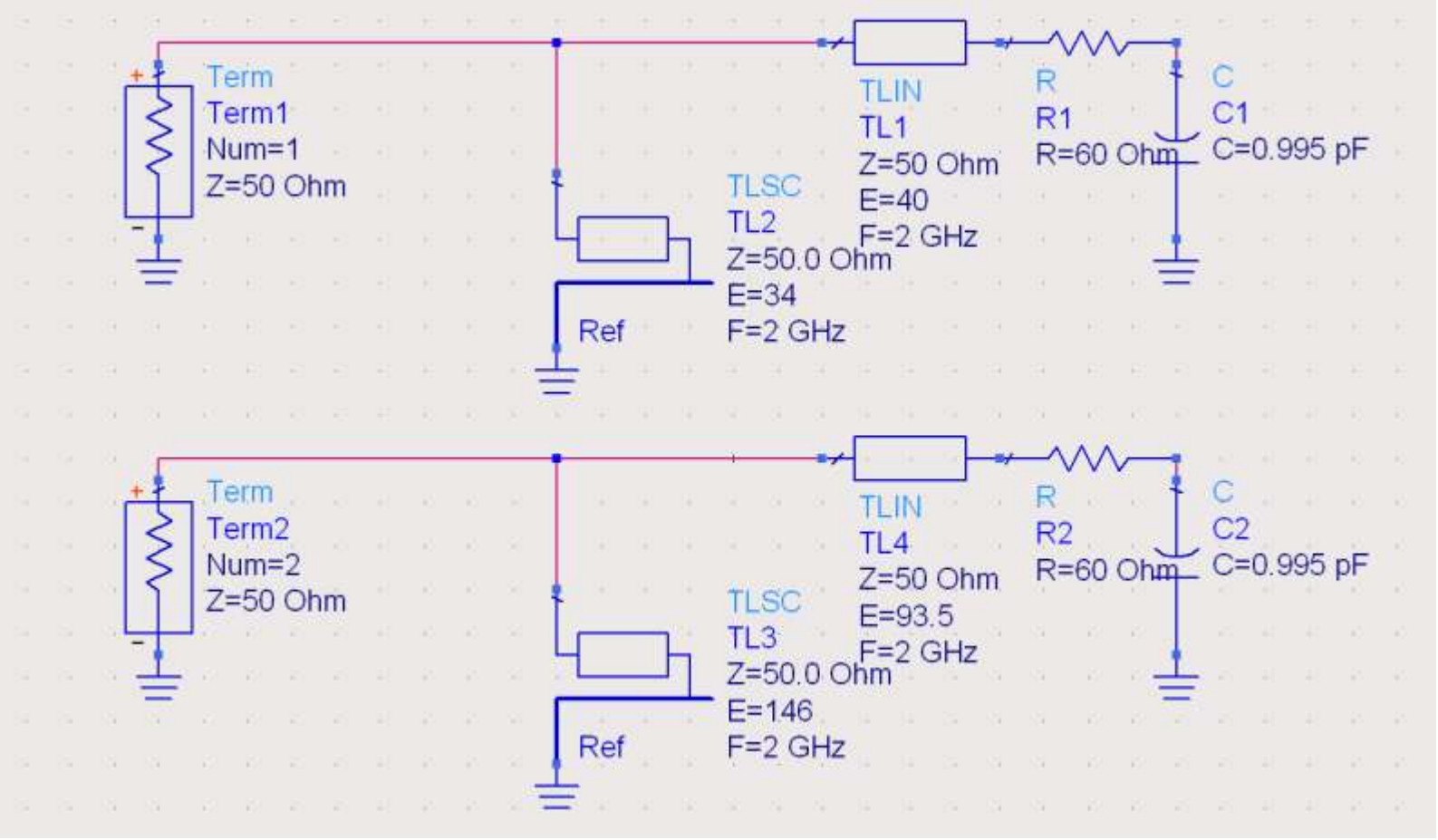

Exemplu, Shunt Stub, sc

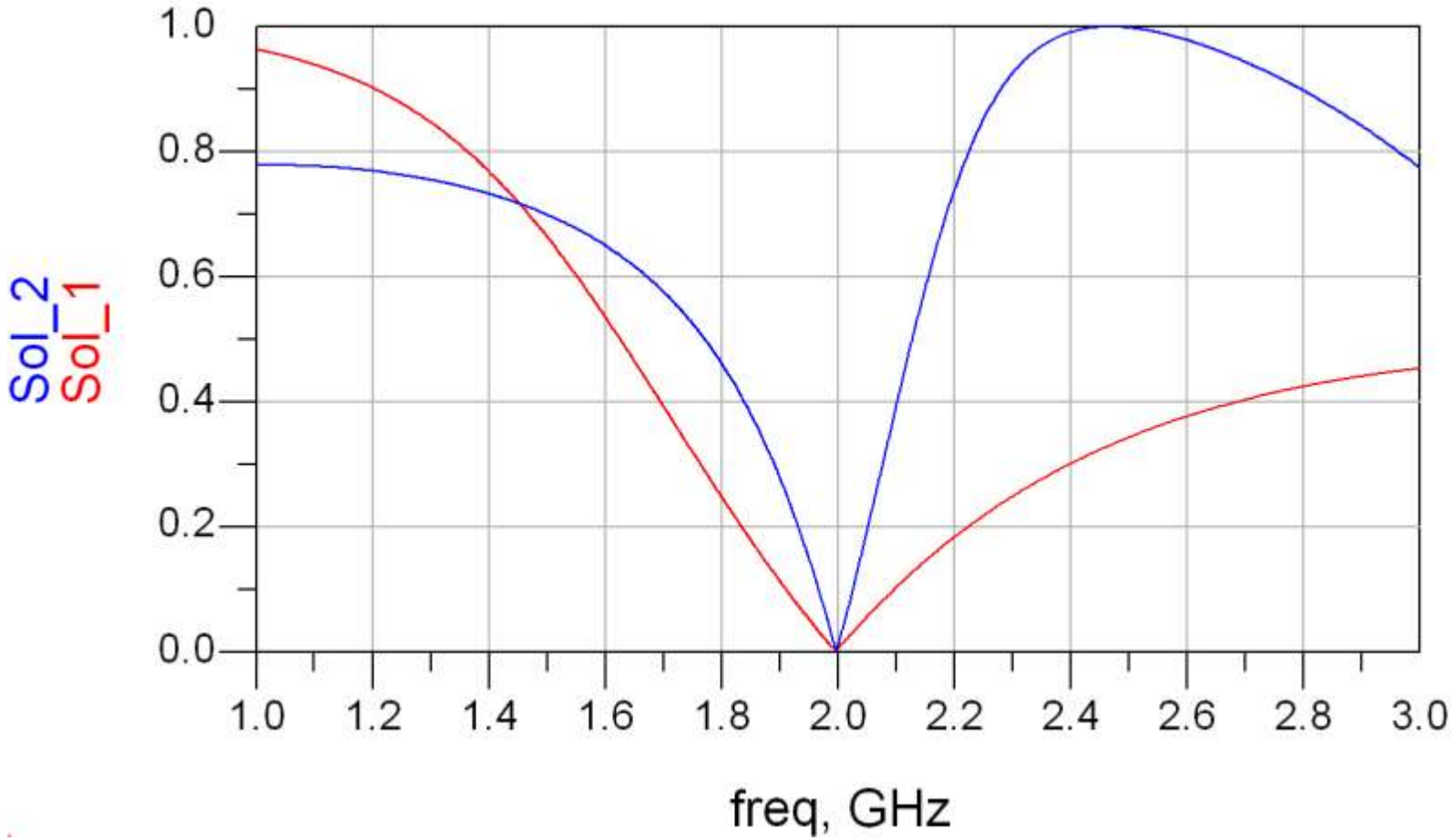

Exemplu, Shunt Stub, sc

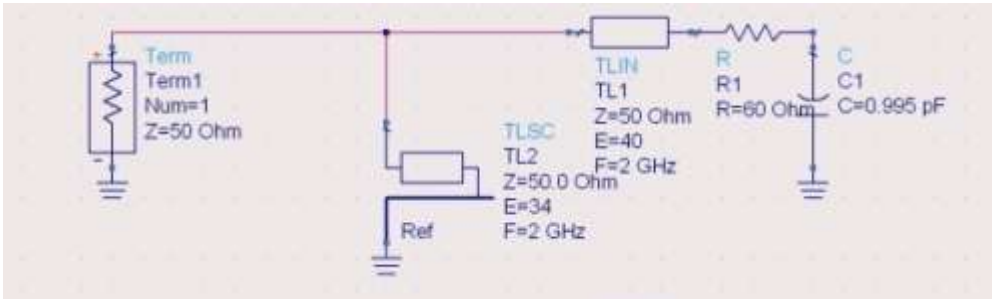

$$l_1 = \frac{40^\circ}{360^\circ} \cdot \lambda = 0.111 \cdot \lambda$$

$$l_2 = \frac{34^\circ}{360^\circ} \cdot \lambda = 0.094 \cdot \lambda$$

$$l_1 = \frac{93.5^\circ}{360^\circ} \cdot \lambda = 0.260 \cdot \lambda$$

$$l_2 = \frac{146^\circ}{360^\circ} \cdot \lambda = 0.406 \cdot \lambda$$

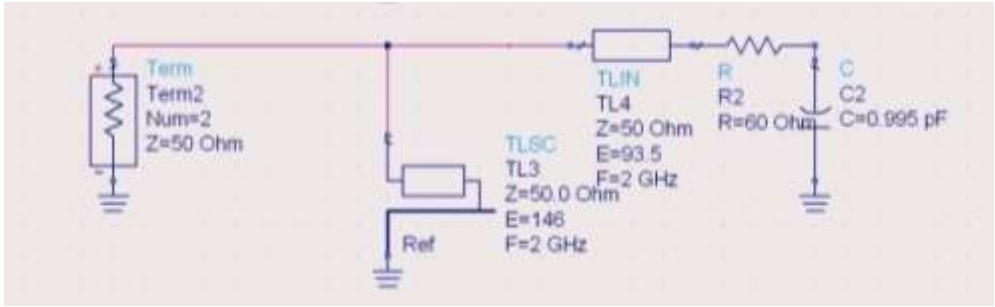

Exemplu, Shunt Stub, gol

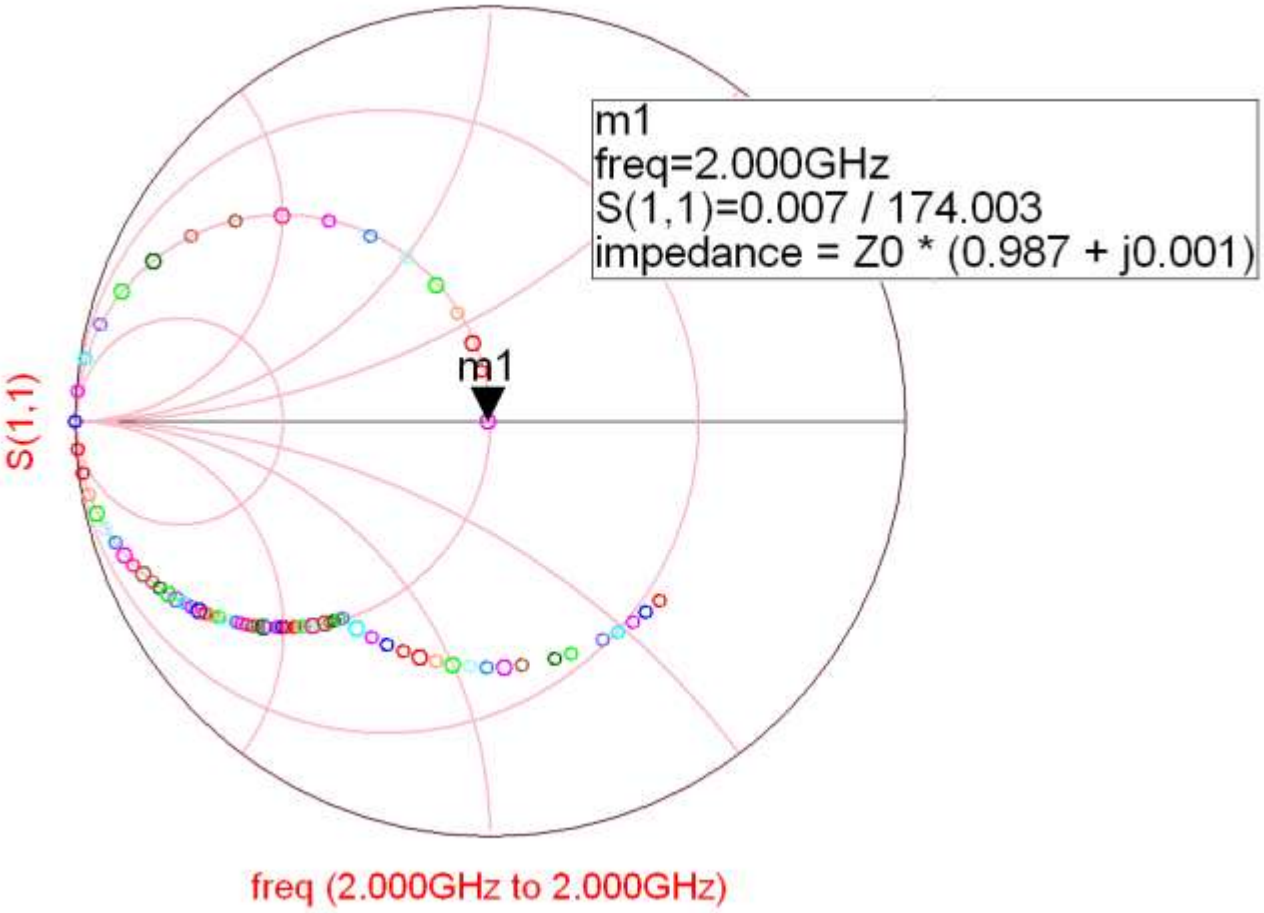

Exemplu, Shunt Stub, gol

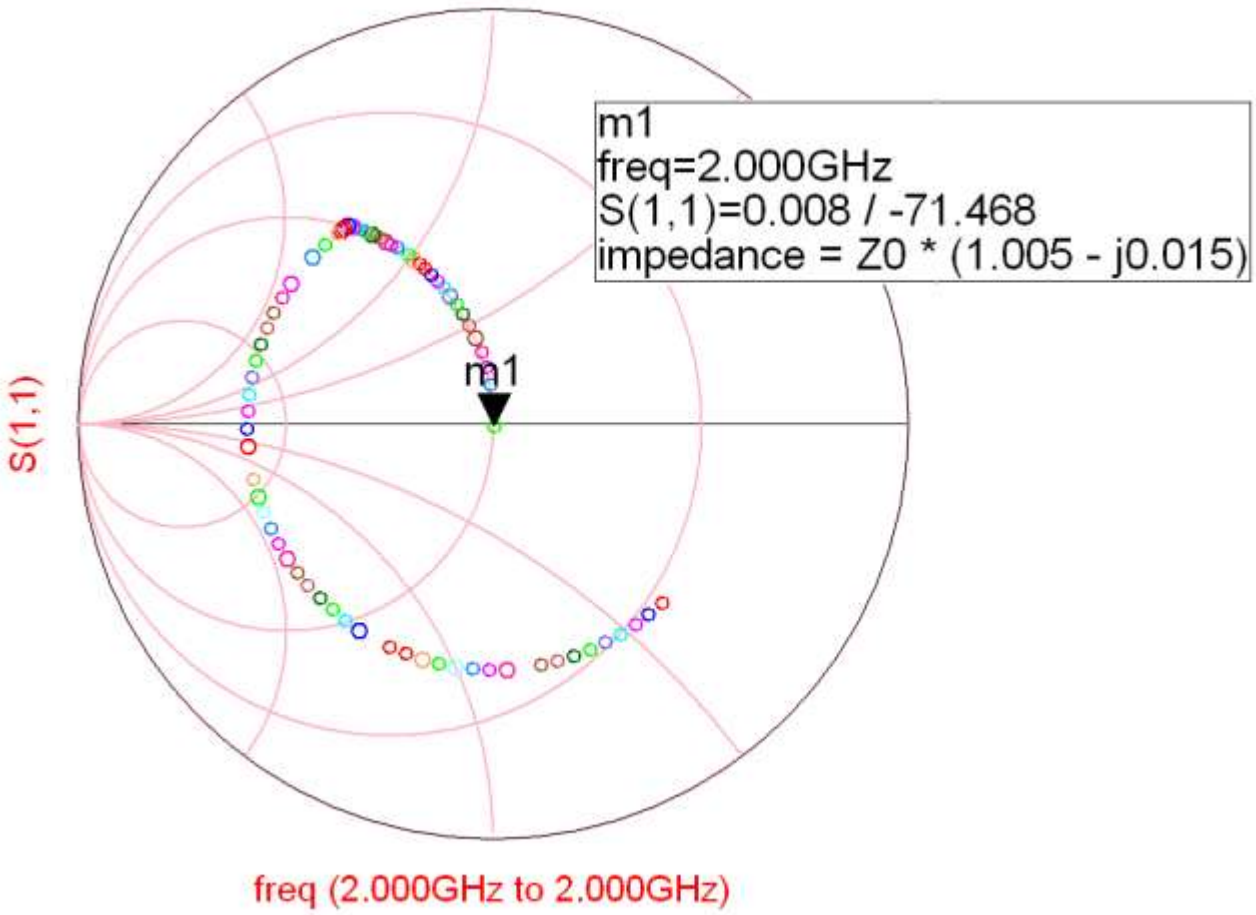

Exemplu, Shunt Stub, gol

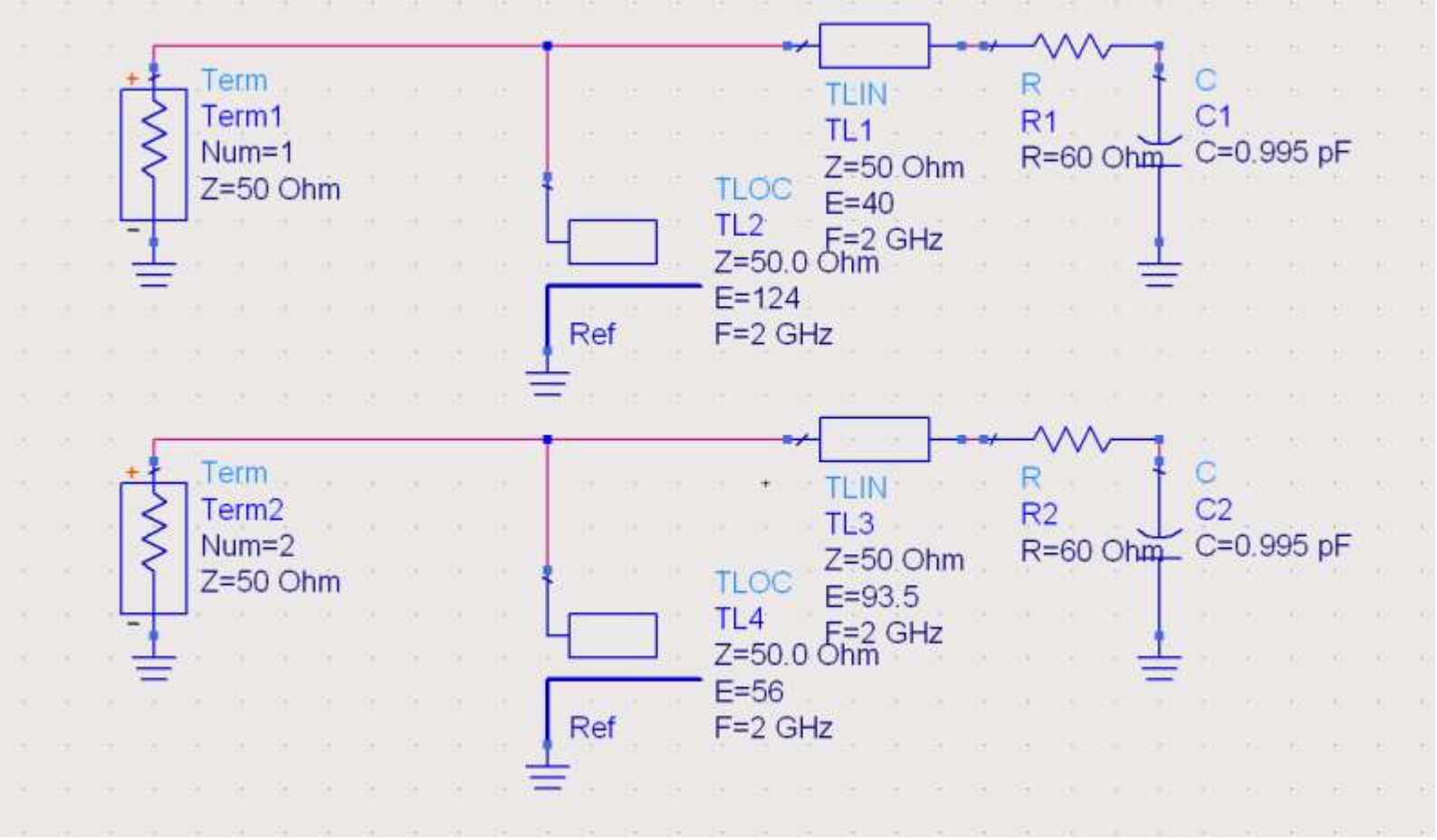

Exemplu, Shunt Stub, gol

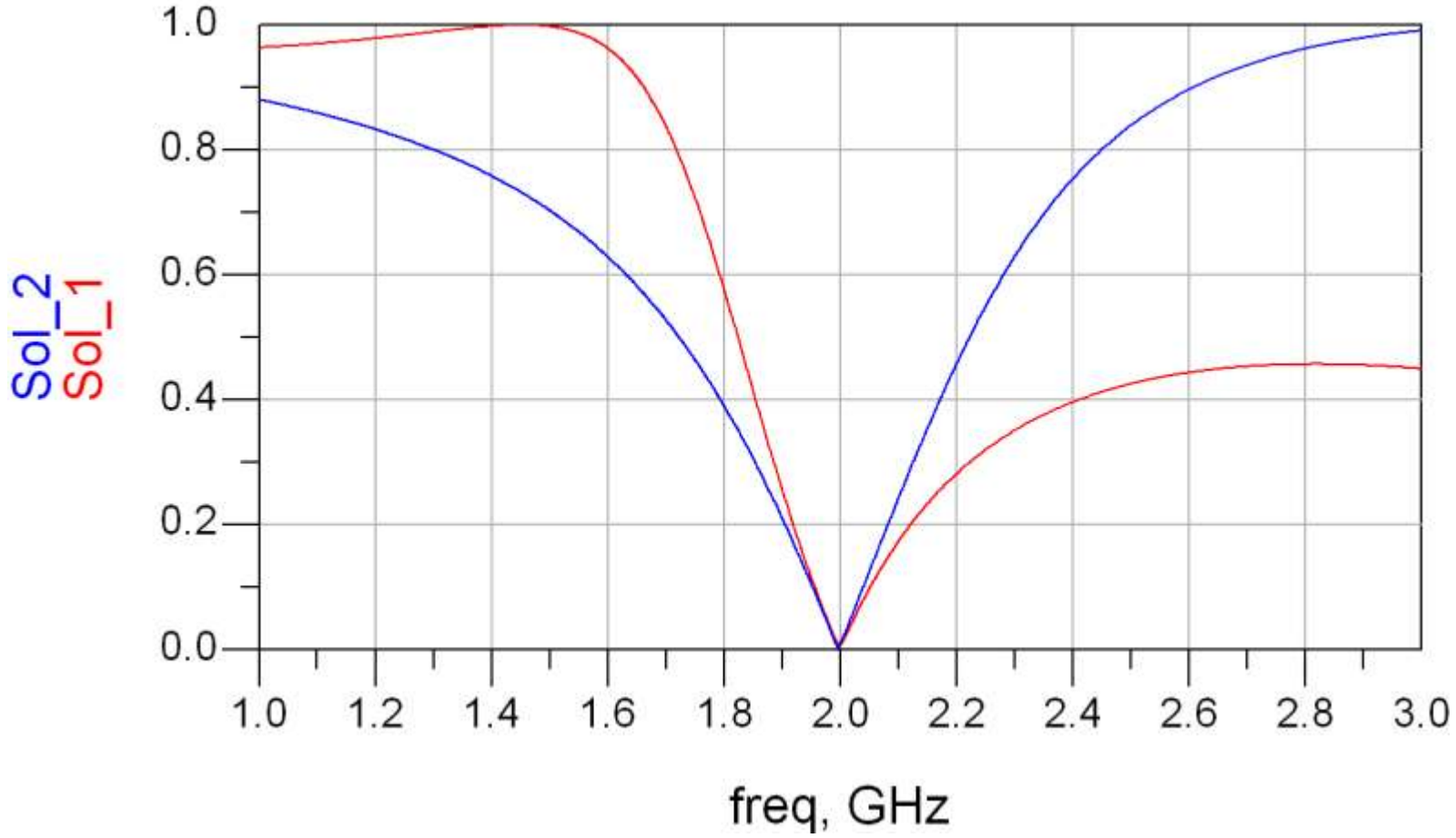

Exemplu, Shunt Stub, gol

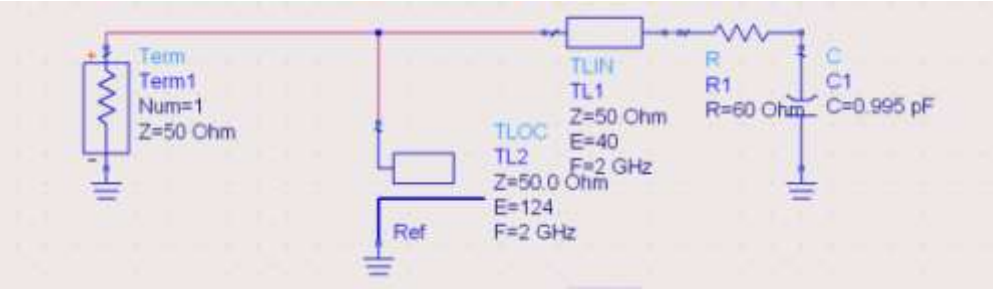

$$l_1 = \frac{40^\circ}{360^\circ} \cdot \lambda = 0.111 \cdot \lambda$$

$$l_2 = \frac{124^\circ}{360^\circ} \cdot \lambda = 0.344 \cdot \lambda = 0.094 \cdot \lambda + \frac{\lambda}{4}$$

$$l_1 = \frac{93.5^\circ}{360^\circ} \cdot \lambda = 0.260 \cdot \lambda$$

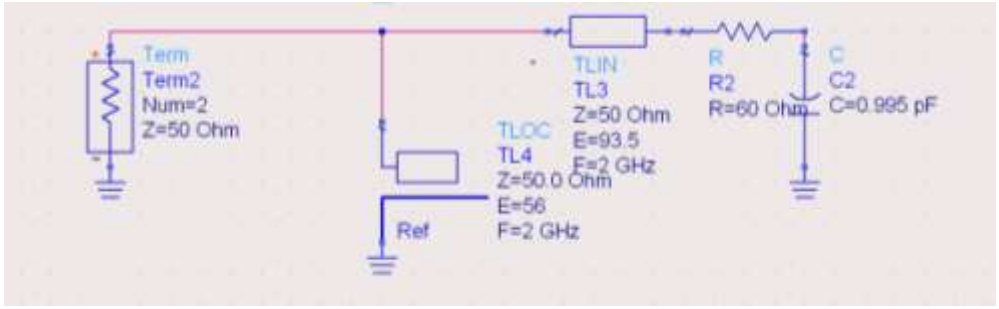

$$l_2 = \frac{56^\circ}{360^\circ} \cdot \lambda = 0.156 \cdot \lambda = 0.406 \cdot \lambda - \frac{\lambda}{4}$$

Stub, observatii

- functiile care ofera impedanta de intrare intr-un stub sunt periodice in functie de lungime (l), functii tip tg/ctg

$$Z_{in,sc} = j \cdot Z_0 \cdot \tan \beta \cdot l \qquad Z_{in,g} = -j \cdot Z_0 \cdot \cot \beta \cdot l$$

  - adunarea si scadere

$$E = \beta \cdot l = \pi = 180^\circ \qquad l = k \cdot \frac{\lambda}{2}, \forall k \in \mathbf{N}$$

nu schimba rezultatul (rotatie completa in jurul diagramei – de aici provine gradatia 0.5 lungimi de unda a circumferintei diagramei)

Stub, observatii

- pentru reglaj in vederea adaptarii este preferabila pornirea din punctul neutru (valoarea lungimii liniei care nu influenteaza circuitul)
  - linia in serie: $E = \beta \cdot l = 0$
  - stub: $Z_{in} \to \infty, \quad \tan \beta \cdot l / \cot \beta \cdot l \to \infty, \quad E = 90° / 0°$
- o adaugare sau scadere de sfert de lungime de unda transforma impedanta:

$$Z_{in,sc} = j \cdot Z_0 \cdot \tan \beta \cdot l \qquad Z_{in,g} = -j \cdot Z_0 \cdot \cot \beta \cdot l$$

$$\tan \beta \cdot \left(l + \frac{\lambda}{4} \right) = \tan \left(\beta \cdot l + \frac{\pi}{2} \right) = \frac{\sin\left(\beta \cdot l + \pi/2\right)}{\cos\left(\beta \cdot l + \pi/2\right)} = \frac{\cos \beta \cdot l}{-\sin \beta \cdot l} = -\cot \beta \cdot l$$

Solutie analitica

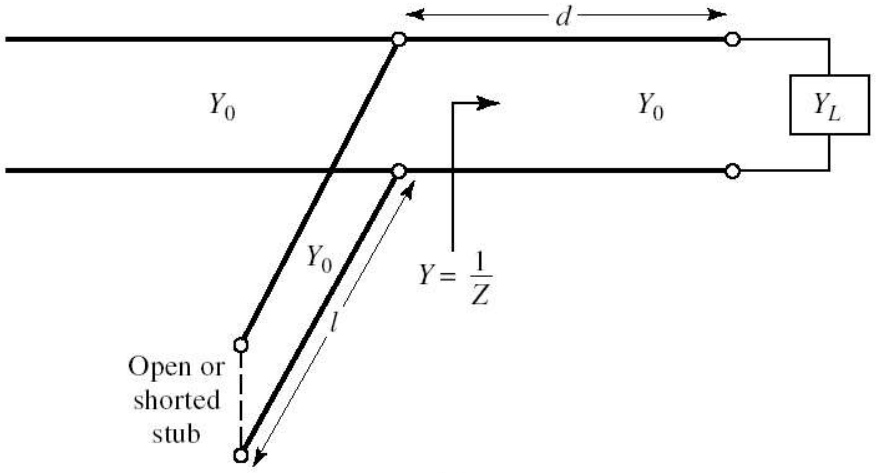

$$Z_L = \frac{1}{Y_L} = R_L + j \cdot X_L$$

$$Z = Z_0 \cdot \frac{(R_L + j \cdot X_L) + j \cdot Z_0 \cdot t}{Z_0 + j \cdot (R_L + j \cdot X_L) \cdot t}$$

$$t \overset{not}{=} \tan\beta \cdot d \qquad Y = G + j \cdot B = \frac{1}{Z}$$

$$G = \frac{R_L \cdot (1 + t^2)}{R_L^2 + (X_L + Z_0 \cdot t)^2}$$

$$B = \frac{R_L^2 \cdot t - (Z_0 - X_L \cdot t) \cdot (X_L + Z_0 \cdot t)}{Z_0 \cdot \left[R_L^2 + (X_L + Z_0 \cdot t)^2\right]}$$

- *d* este ales astfel incat $G = Y_0 = \frac{1}{Z_0}$

$$Z_0 \cdot (R_L - Z_0) \cdot t^2 - 2 \cdot X_L \cdot Z_0 \cdot t + (R_L \cdot Z_0 - R_L^2 - X_L^2) = 0$$

Solutie analitica

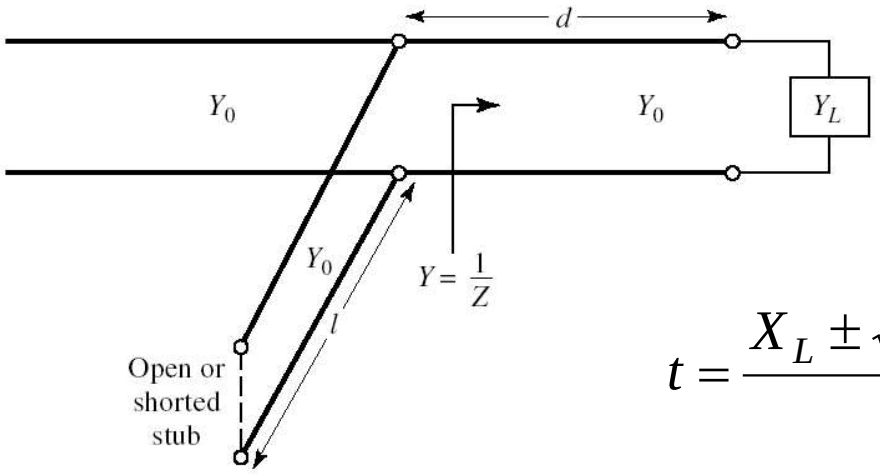

$$t = -\frac{X_L}{2 \cdot Z_0}, \quad R_L = Z_0$$

$$t = \frac{X_L \pm \sqrt{R_L \cdot \left[(Z_0 - R_L)^2 + X_L^2 \right] / Z_0}}{R_L - Z_0} \qquad R_L \neq Z_0$$

- ecuatie de gradul 2, 2 solutii posibile
- *d* este ales astfel incat

$$\frac{d}{\lambda} = \begin{cases} \frac{1}{2\pi} \cdot \arctan t & t \geq 0 \\ \frac{1}{2\pi} \cdot (\pi + \arctan t) & t < 0 \end{cases}$$

Solutie analitica

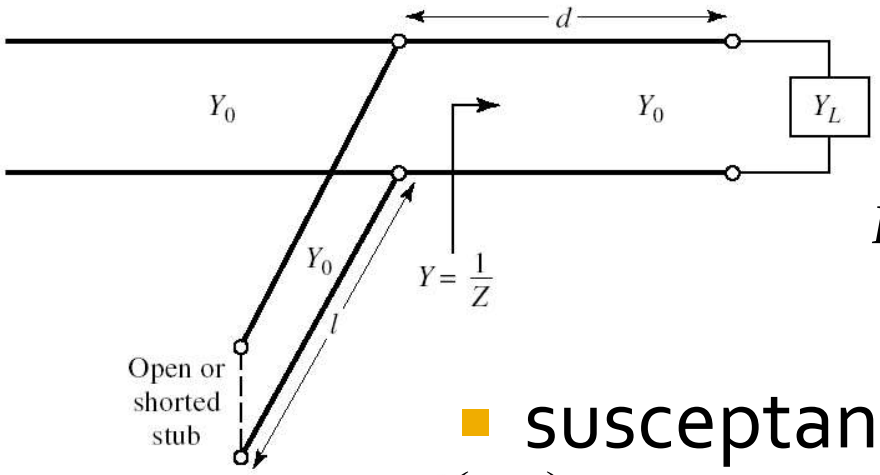

$$B_S = -B$$

$$B = \frac{R_L^2 \cdot t - (Z_0 - X_L \cdot t) \cdot (X_L + Z_0 \cdot t)}{Z_0 \cdot \left[R_L^2 + (X_L + Z_0 \cdot t)^2\right]}$$

- susceptanta de anulare se obtine

$$\frac{l_{gol}}{\lambda} = \frac{1}{2\pi} \cdot \arctan\left(\frac{B_S}{Y_0}\right) = \frac{-1}{2\pi} \cdot \arctan\left(\frac{B}{Y_0}\right)$$

$$\frac{l_{sc}}{\lambda} = \frac{-1}{2\pi} \cdot \arctan\left(\frac{Y_0}{B_S}\right) = \frac{1}{2\pi} \cdot \arctan\left(\frac{Y_0}{B}\right)$$

- pentru lungimi negative se adauga λ/2

Caz 2, Series Stub

- Series Stub (sectiune de linie in serie)
- tehnologic mai dificil de realizat la liniile monofilare (microstrip)

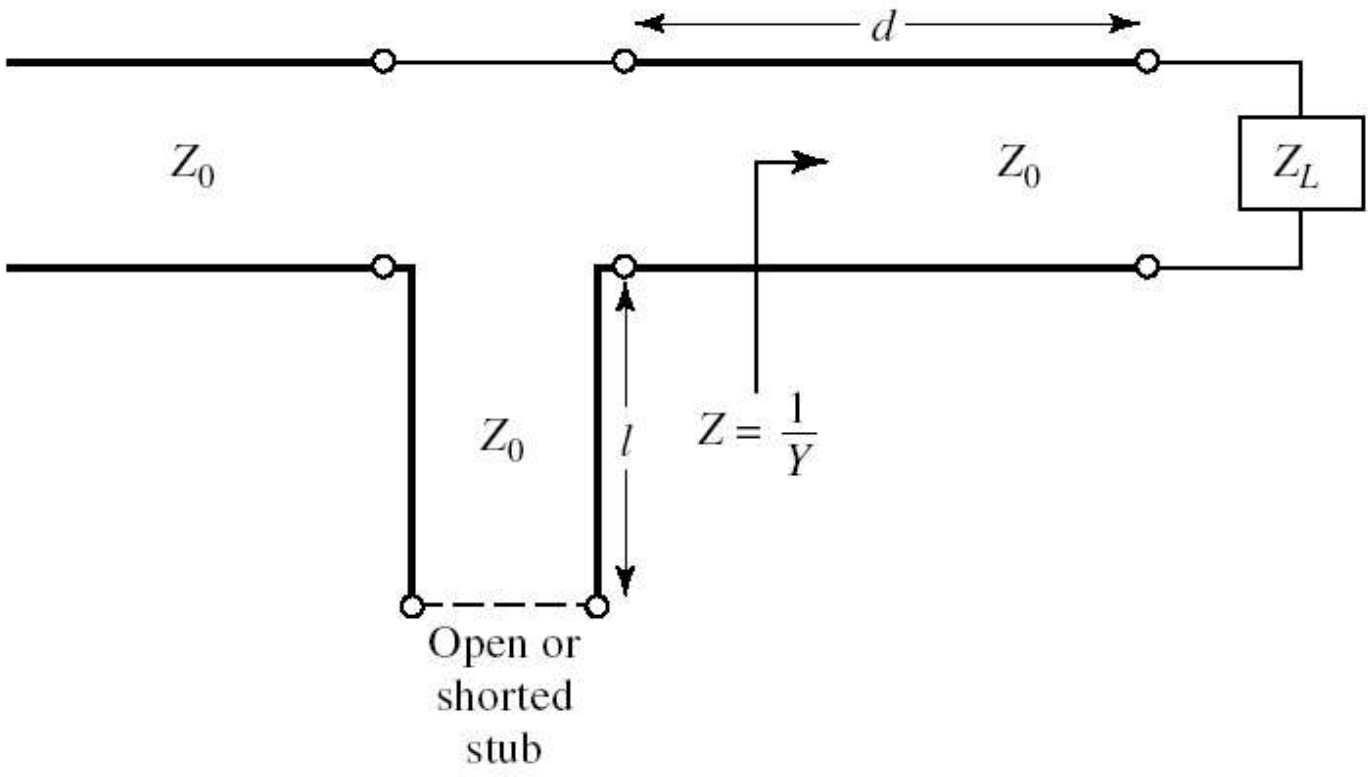

Caz 2, Series Stub

- Se utilizeaza o linie de transmisie serie pentru a muta coeficientul de reflexie pe cercul $g_L = 1$
- Se introduce o reactanta in serie pentru a realiza adaptarea
- Aceasta reactanta se realizeaza cu o linie de transmisie care poate fi dupa nevoie:
  - in gol
  - in scurtcircuit

$$Z_{in} = Z_0 \cdot \frac{Z_L + j \cdot Z_0 \cdot \tan \beta \cdot l}{Z_0 + j \cdot Z_L \cdot \tan \beta \cdot l}$$

$$Z_{in,sc} = j \cdot Z_0 \cdot \tan \beta \cdot l \qquad Z_{in,g} = -j \cdot Z_0 \cdot \cot \beta \cdot l$$

Adaptare, linie serie + reactanta in serie

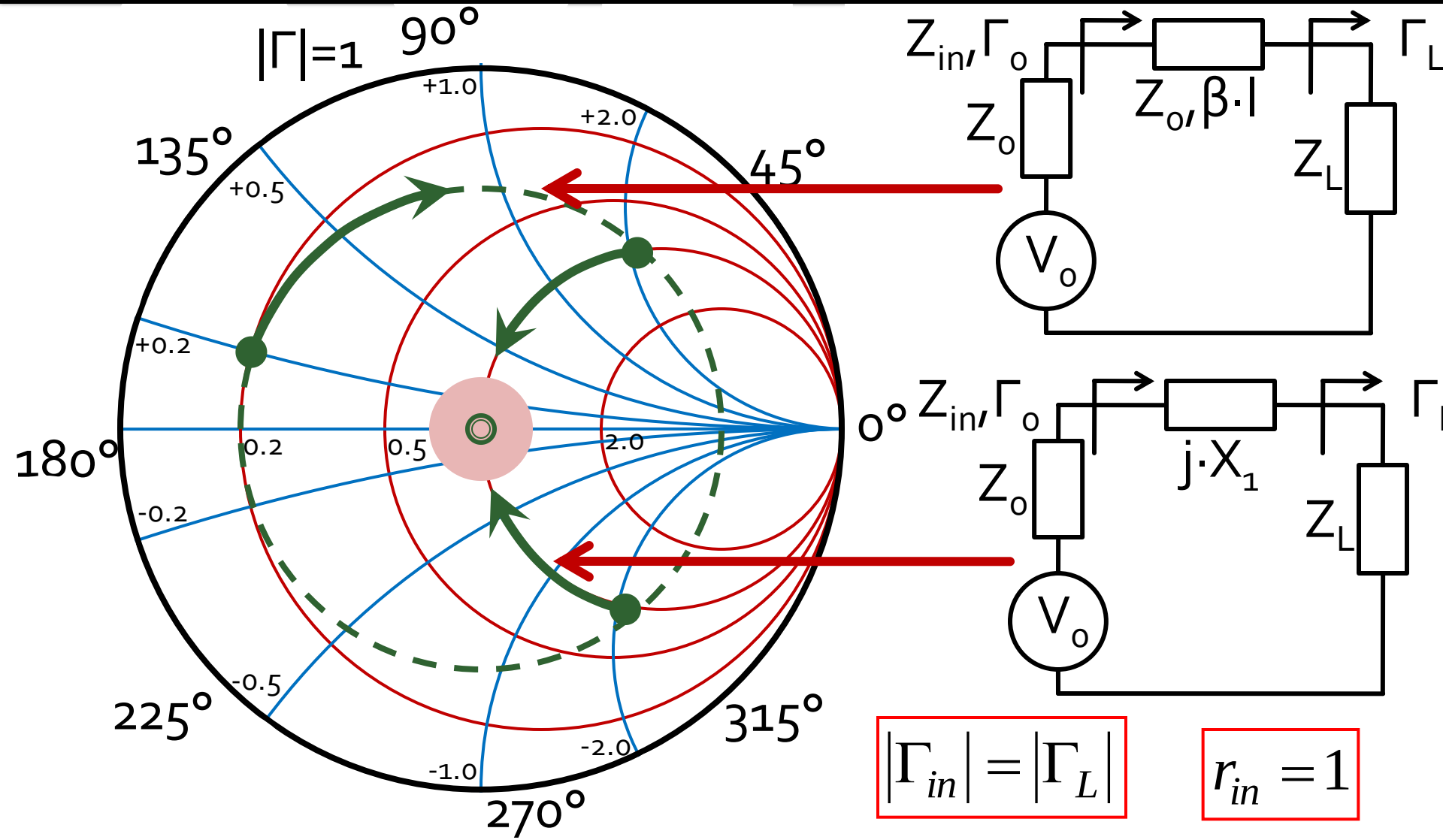

Exemplu, Series Stub, gol

- sarcina: 100 Ω serie 6.37 nH
- doua solutii posibile

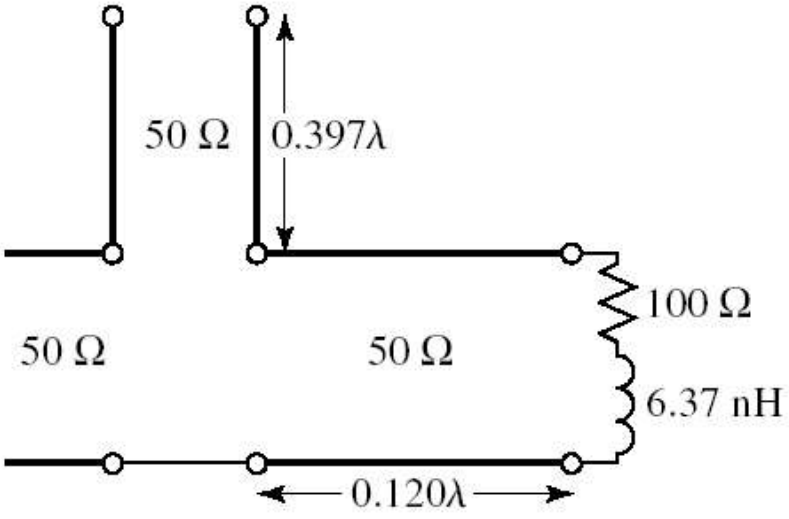

Solution 1

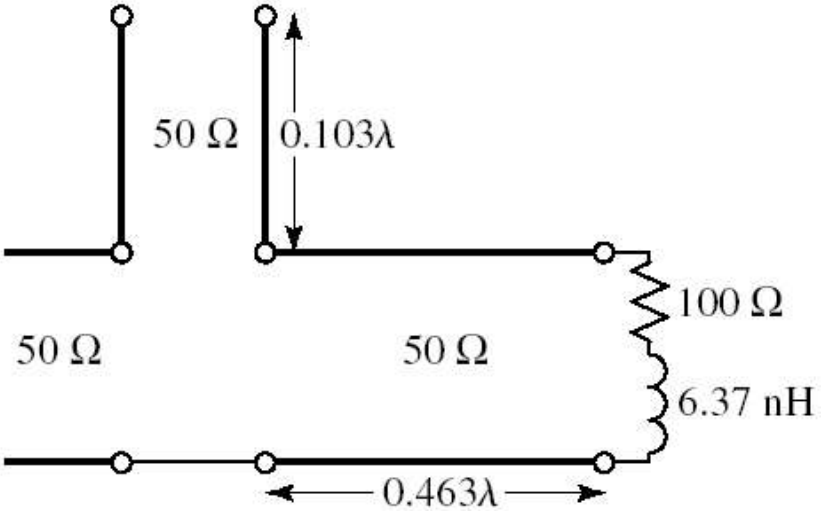

Solution 2

Exemplu, Series Stub, gol

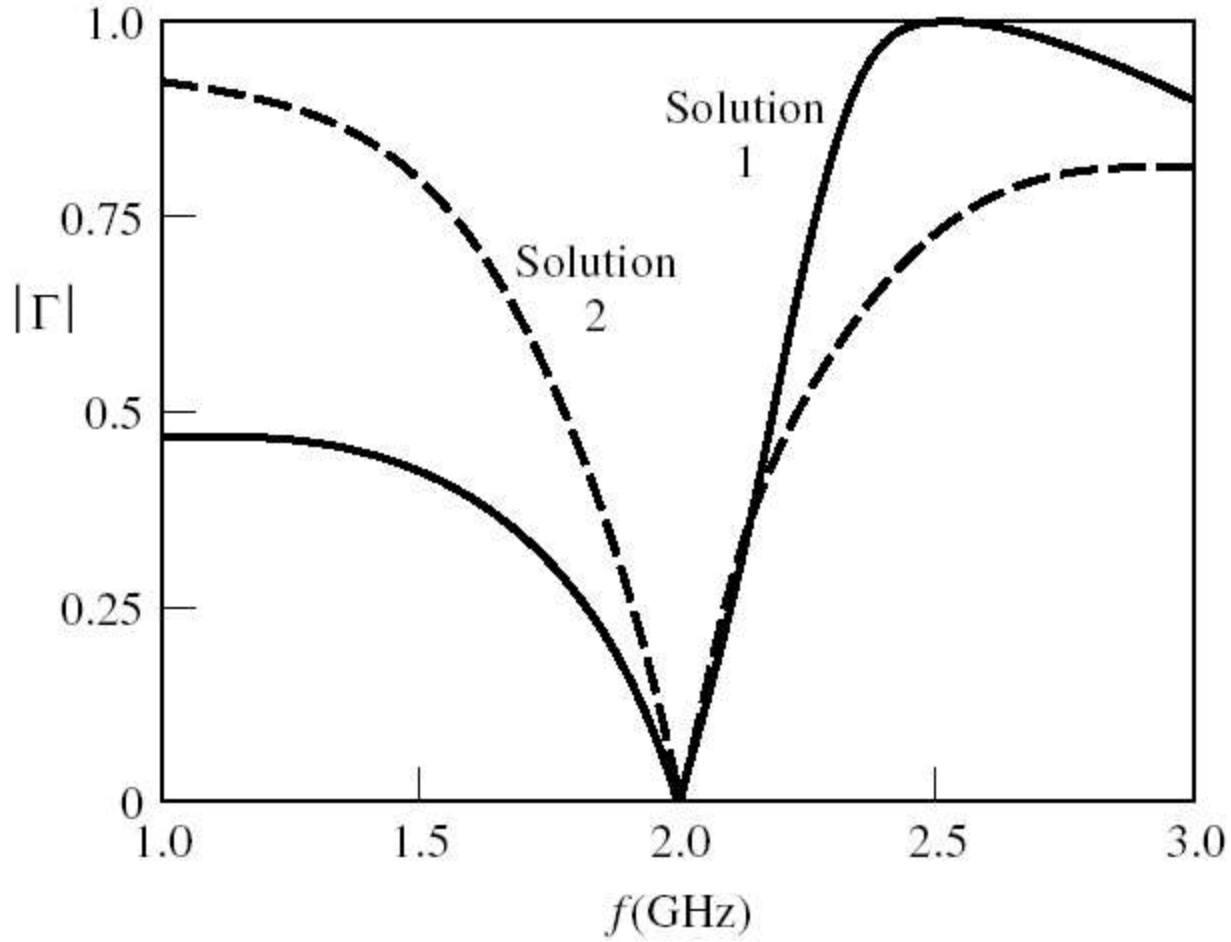

Exemplu, Series Stub, gol

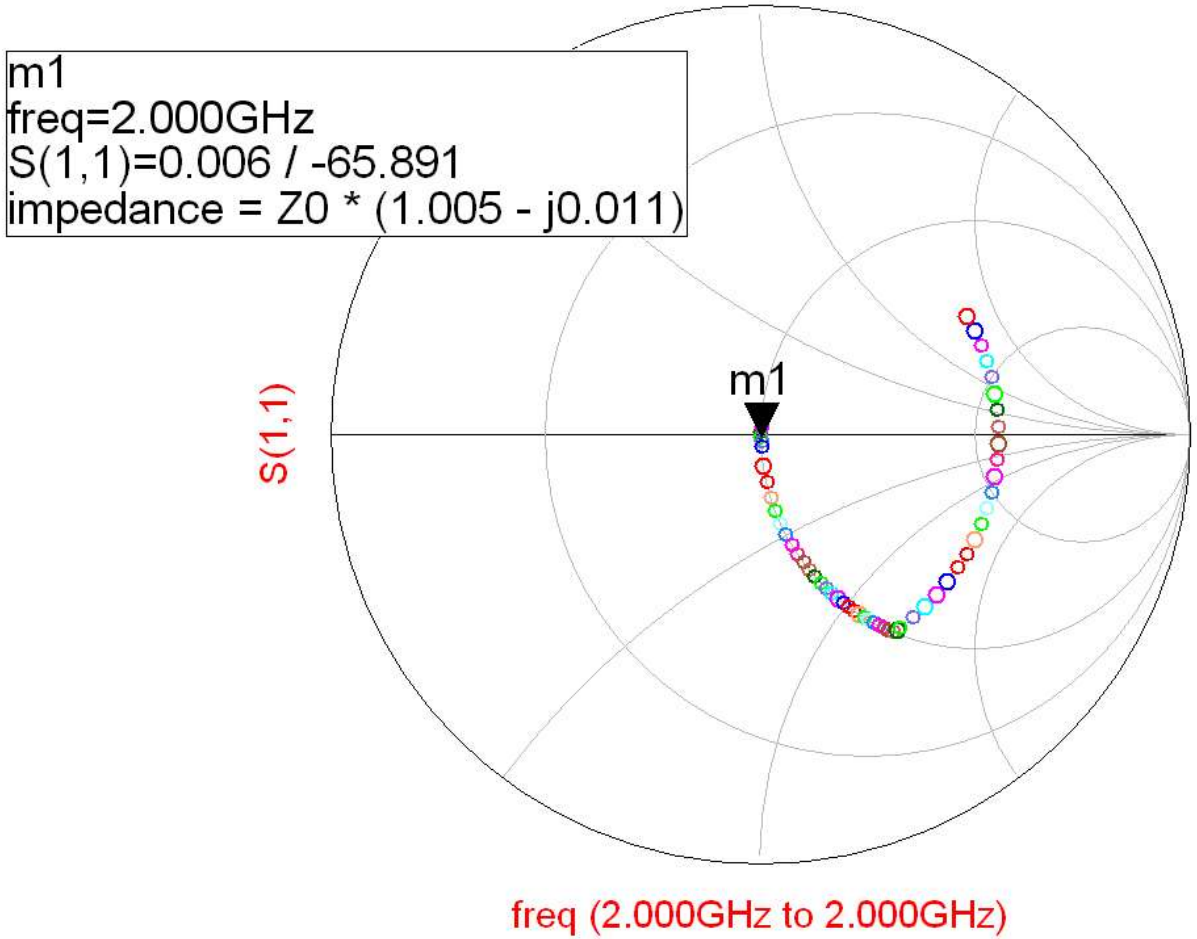

Exemplu, Series Stub, gol

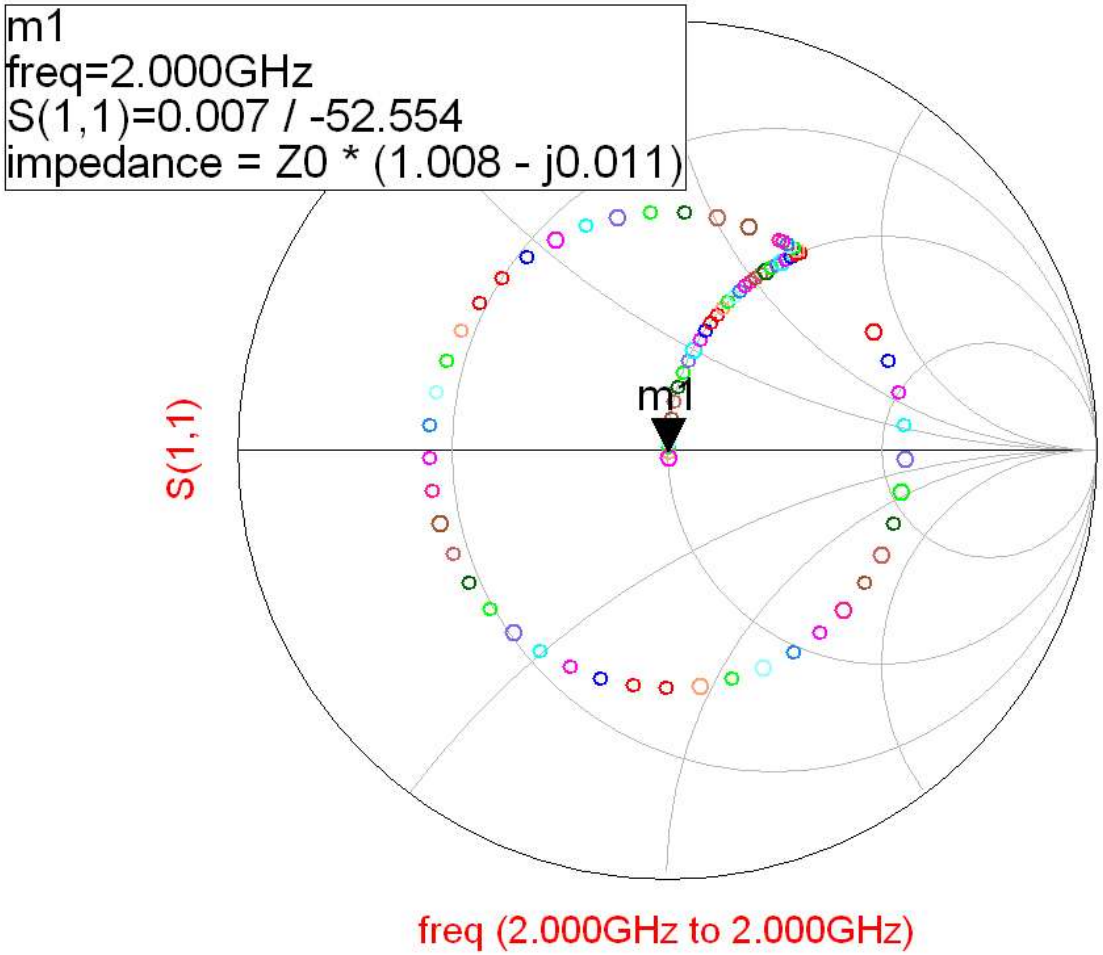

Exemplu, Series Stub, gol

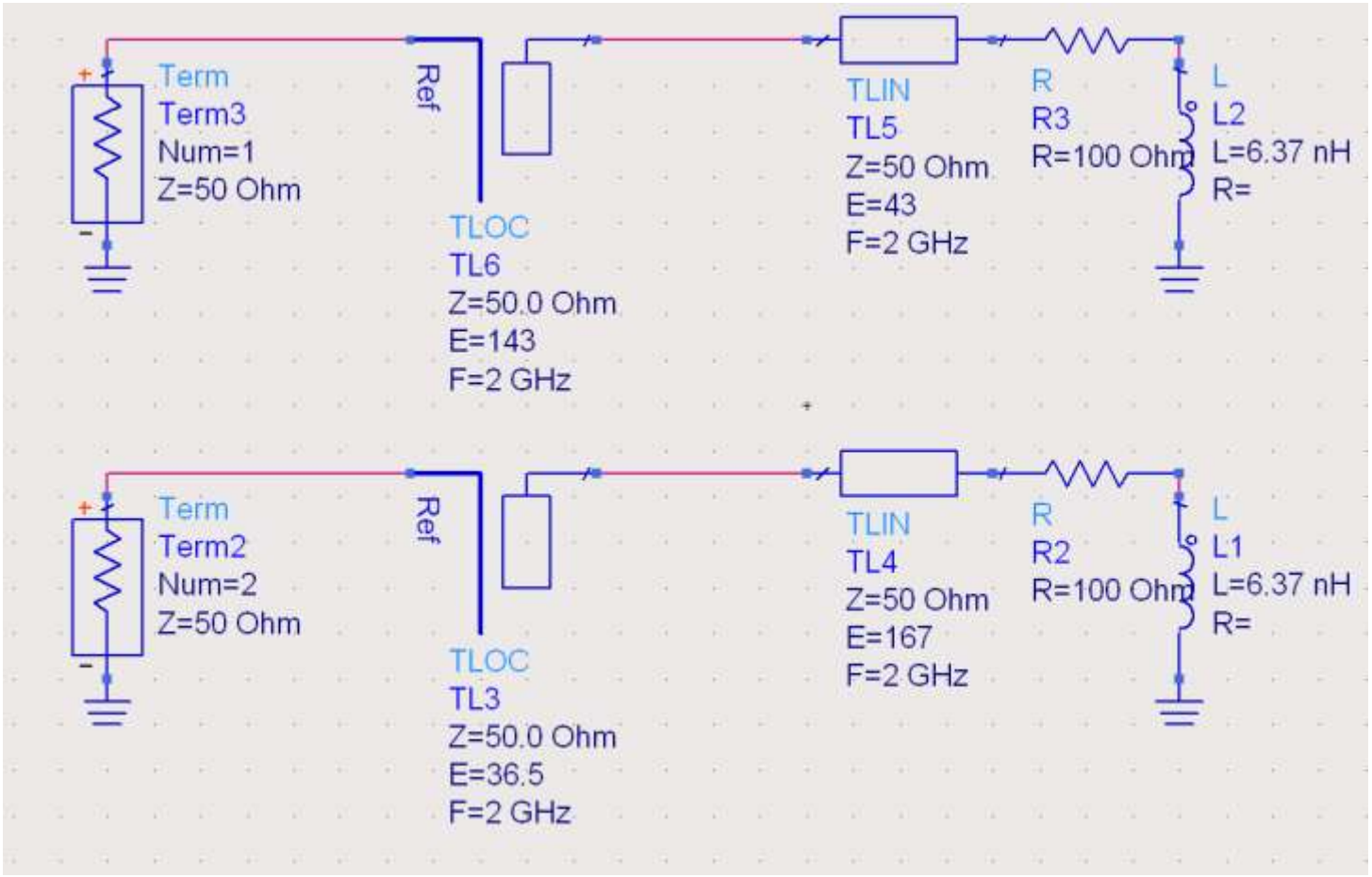

Exemplu, Series Stub, gol

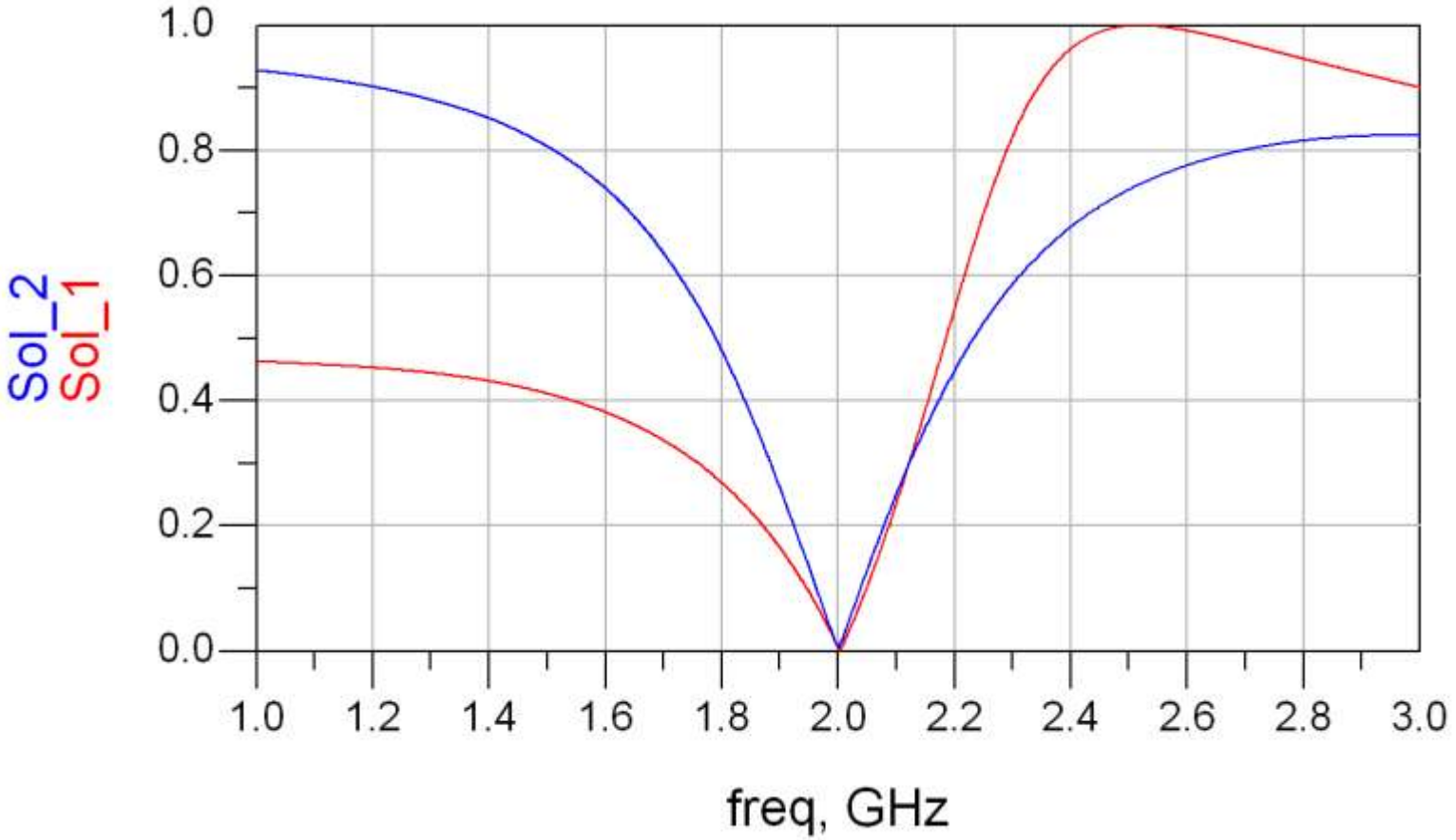

Exemplu, Series Stub, gol

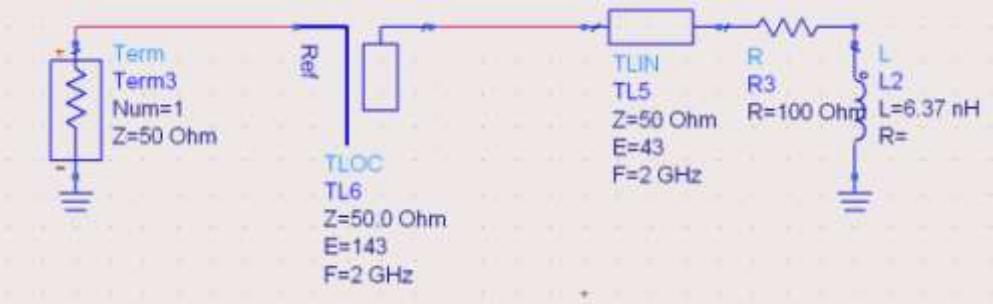

$$l_1 = \frac{43^\circ}{360^\circ} \cdot \lambda = 0.119 \cdot \lambda$$

$$l_2 = \frac{143^\circ}{360^\circ} \cdot \lambda = 0.397 \cdot \lambda$$

$$l_1 = \frac{167^\circ}{360^\circ} \cdot \lambda = 0.464 \cdot \lambda$$

$$l_2 = \frac{36.5^\circ}{360^\circ} \cdot \lambda = 0.101 \cdot \lambda$$

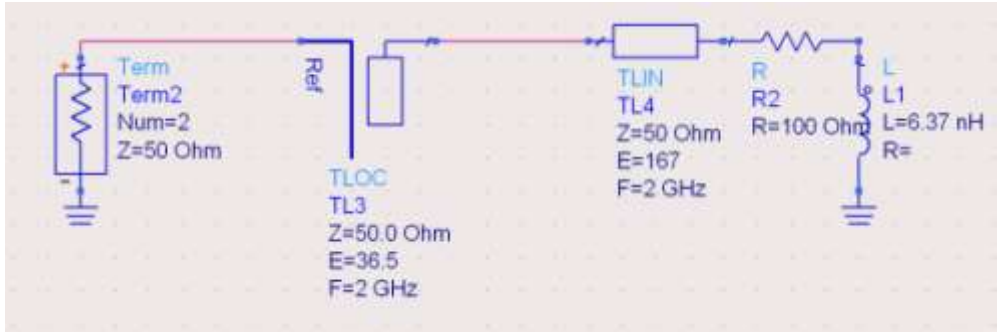

Solutie analitica

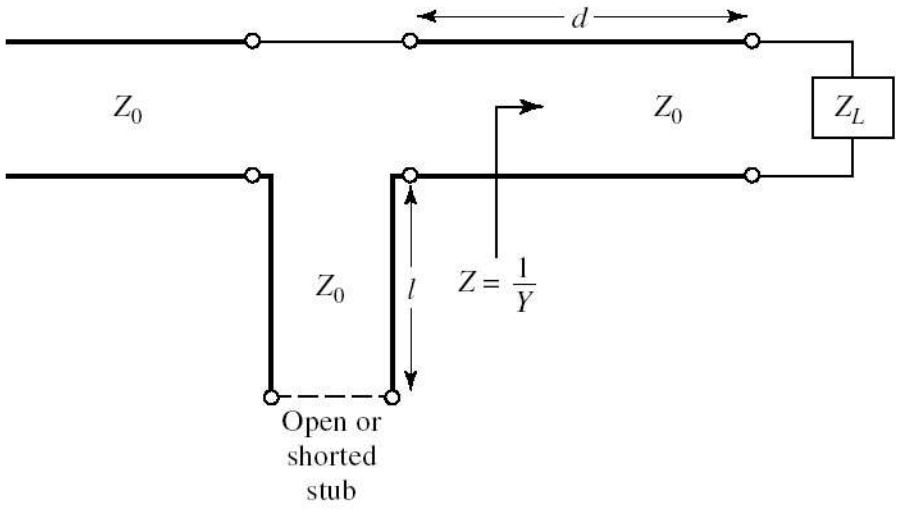

$$Y_L = \frac{1}{Z_L} = G_L + j \cdot B_L$$

$$Y = Y_0 \cdot \frac{(G_L + j \cdot B_L) + j \cdot Y_0 \cdot t}{Y_0 + j \cdot (G_L + j \cdot B_L) \cdot t}$$

$$t \overset{not}{=} \tan\beta \cdot d \qquad Z = R + j \cdot X = \frac{1}{Y}$$

$$R = \frac{G_L \cdot (1 + t^2)}{G_L^2 + (G_L + Y_0 \cdot t)^2}$$

$$X = \frac{G_L^2 \cdot t - (Y_0 - B_L \cdot t) \cdot (B_L + Y_0 \cdot t)}{Y_0 \cdot \left[G_L^2 + (B_L + Y_0 \cdot t)^2\right]}$$

- *d* este ales astfel incat $R = Z_0 = \frac{1}{Y_0}$

$$Y_0 \cdot (G_L - Y_0) \cdot t^2 - 2 \cdot B_L \cdot Y_0 \cdot t + (G_L \cdot Y_0 - G_L^2 - B_L^2) = 0$$

Solutie analitica

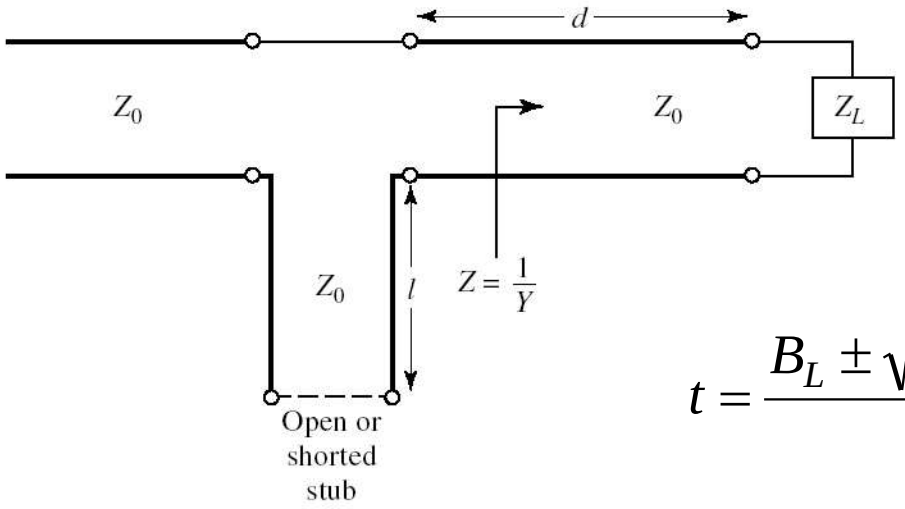

$$t = \frac{-B_L}{2 \cdot Y_0}, \quad G_L = Y_0$$

$$t = \frac{B_L \pm \sqrt{G_L \cdot \left[\left(Y_0 - G_L\right)^2 + B_L^2 \right] / Y_0}}{G_L - Y_0} \qquad G_L \neq Y_0$$

- ecuatie de gradul 2, 2 solutii posibile
- *d* este ales astfel incat

$$\frac{d}{\lambda} = \begin{cases} \frac{1}{2\pi} \cdot \arctan t & t \geq 0 \\ \frac{1}{2\pi} \cdot \left(\pi + \arctan t\right) & t < 0 \end{cases}$$

Solutie analitica

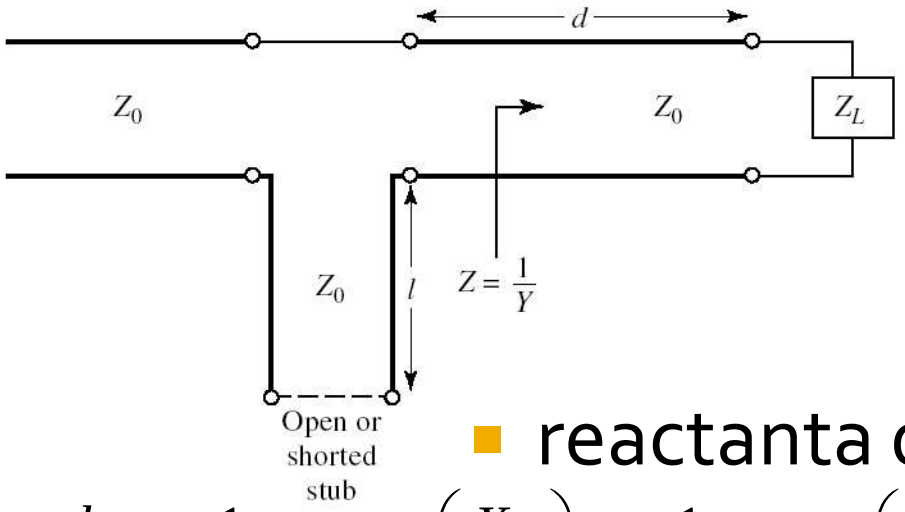

$$X_S = -X$$

$$X = \frac{G_L^2 \cdot t - (Y_0 - B_L \cdot t) \cdot (B_L + Y_0 \cdot t)}{Y_0 \cdot \left[G_L^2 + (B_L + Y_0 \cdot t)^2 \right]}$$

- reactanta de anulare se obtine cu:

$$\frac{l_{sc}}{\lambda} = \frac{1}{2\pi} \cdot \arctan\left(\frac{X_S}{Z_0}\right) = \frac{-1}{2\pi} \cdot \arctan\left(\frac{X}{Z_0}\right)$$

$$\frac{l_{gol}}{\lambda} = \frac{-1}{2\pi} \cdot \arctan\left(\frac{Z_0}{X_S}\right) = \frac{1}{2\pi} \cdot \arctan\left(\frac{Z_0}{X}\right)$$

- pentru lungimi negative se adauga λ/2

Adaptarea cu sectiuni de linii (stub)

- Se alege una din cele 8 solutii posibile convenabila tinand cont de:
  - dimensiuni fizice (suprafata ocupata pe chip/placa)
  - sensibilitatea la variatia parametrilor ($\Delta\Gamma/\Delta E$, $\Delta\Gamma/\Delta l$)
  - caracteristica de frecventa convenabila

Adaptarea cu sectiuni de linii (stub)

- Se alege una din cele 8 solutii posibile convenabila tinand cont de:
  - realizabilitate fizica (conform tehnologiei de linie utilizata)

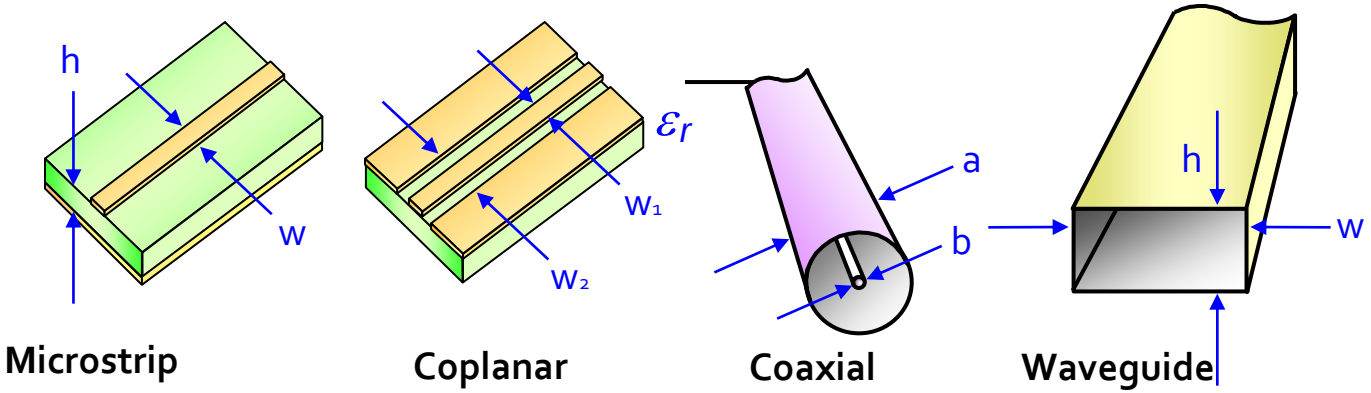

- Dezavantaj:
  - lungimea sectiunii de linie serie e variabila

Adaptarea cu doua sectiuni de linie

- Double stub tuning
- Se foloseste o lungime constanta de linie intre 2 stub-uri

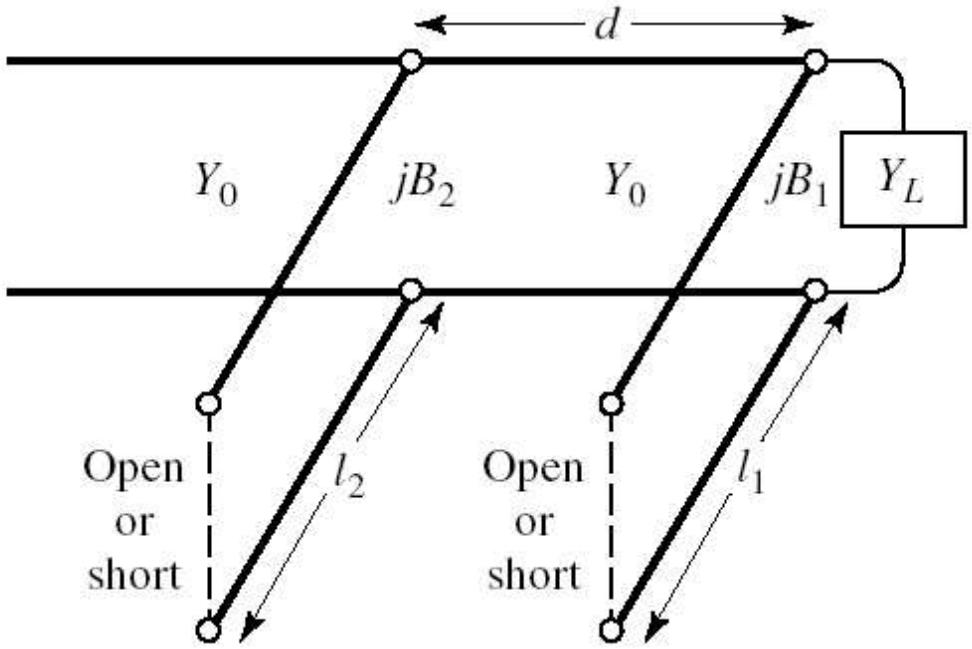

Adaptarea cu doua sectiuni de linie

- Doua solutii posibile

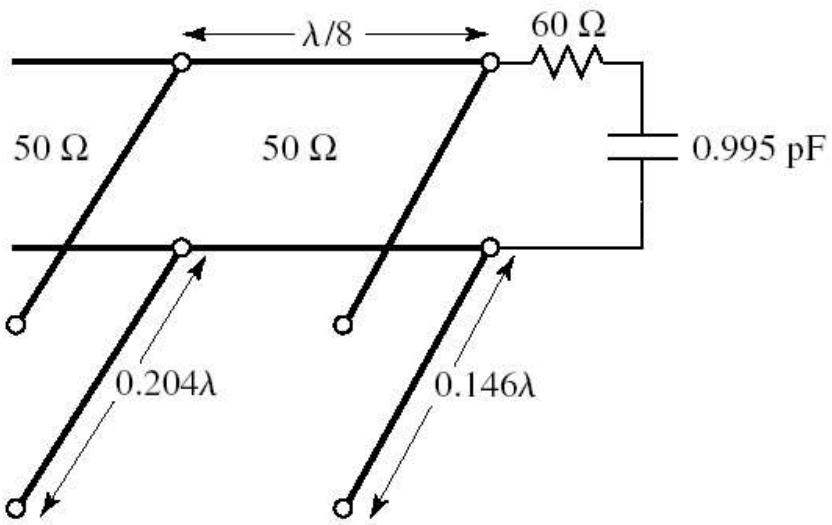

Solution 1

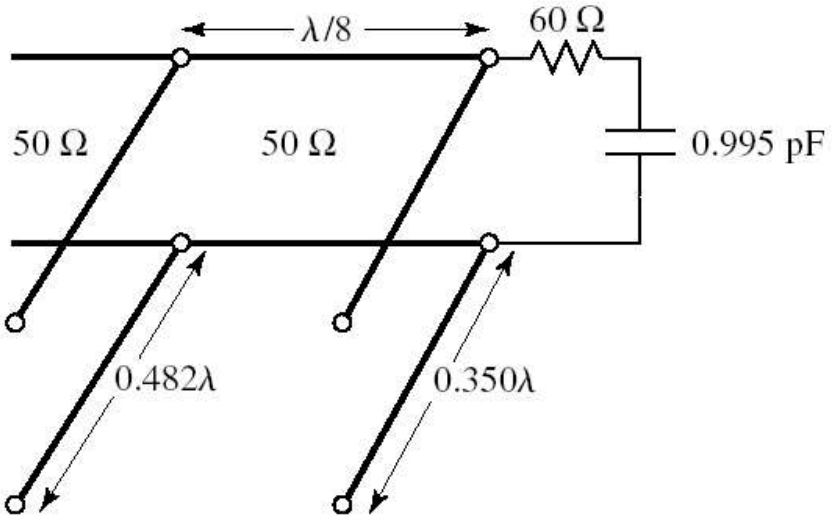

Solution 2

Adaptarea cu doua sectiuni de linie

- Doua solutii posibile

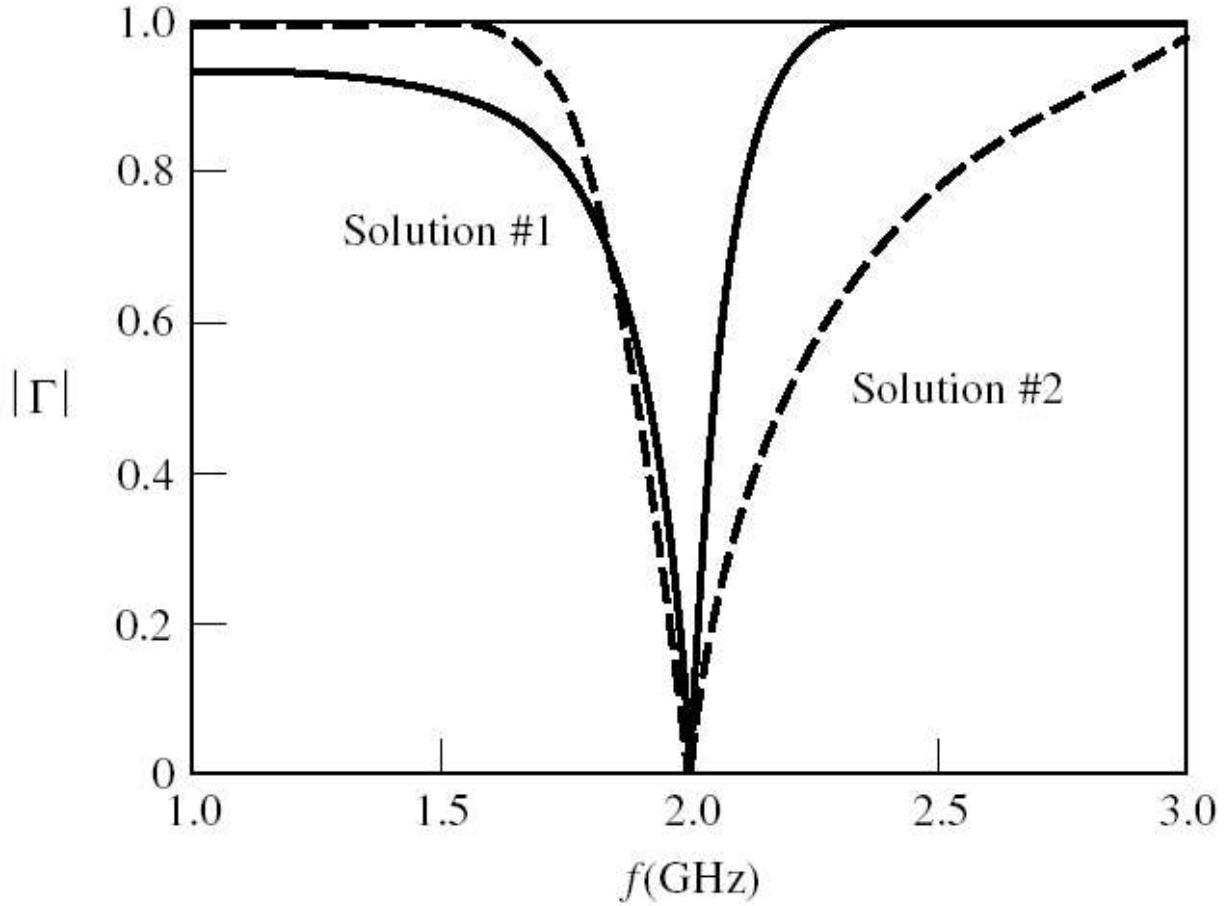

Adaptarea cu doua sectiuni de linie

- Tipic d=λ/8 sau d=3λ/8
- **Nu** pentru orice sarcina este posibila
  - decat daca se poate introduce o sectiune de linie pana la sarcina

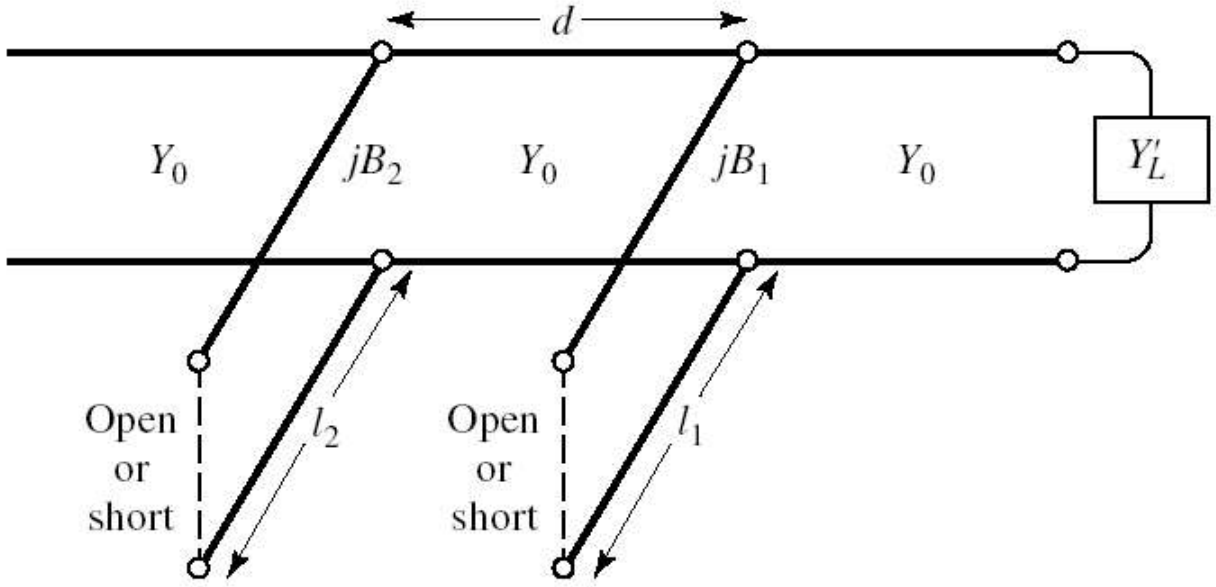

Adaptarea cu sectiuni de linie

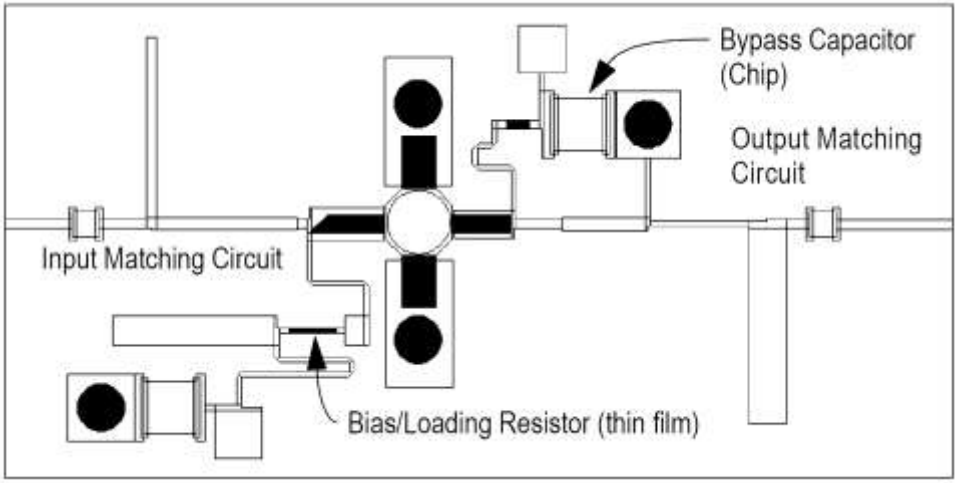

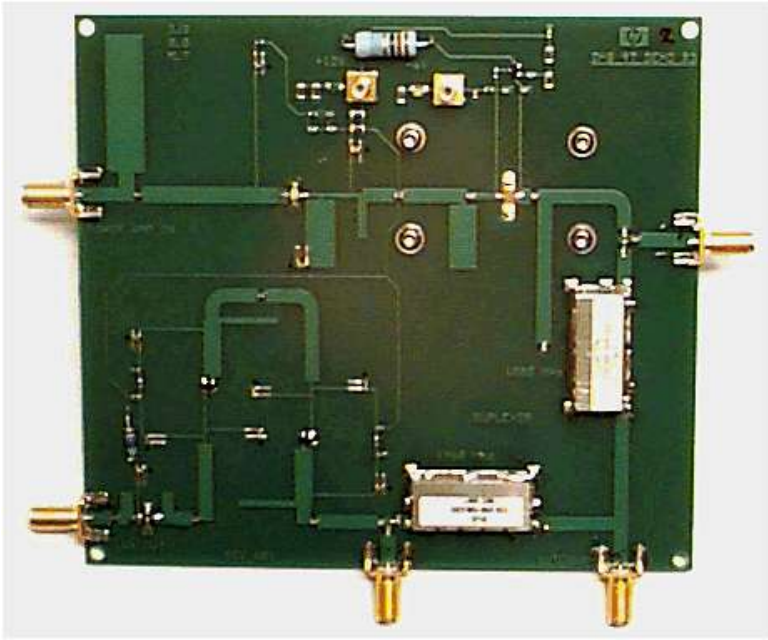

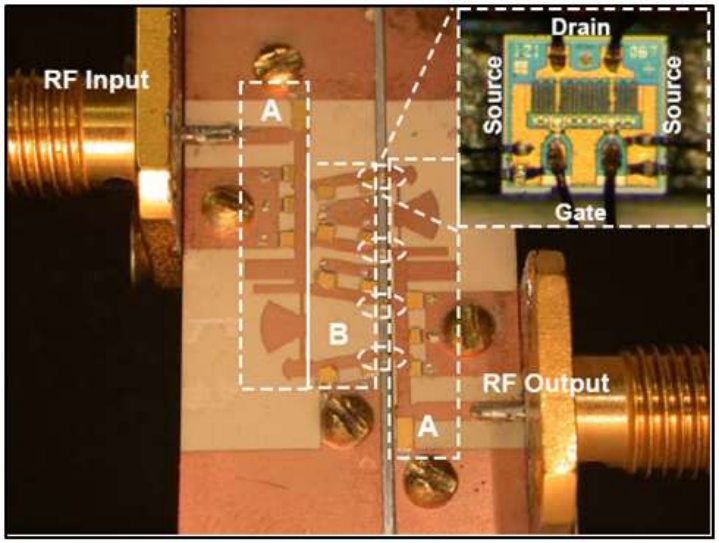

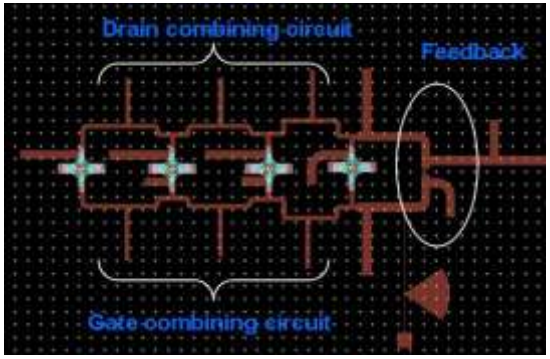

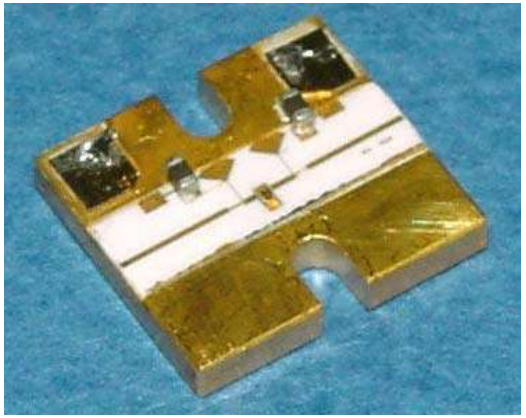

Amplificatoare de microunde

Amplificatoare pentru microunde

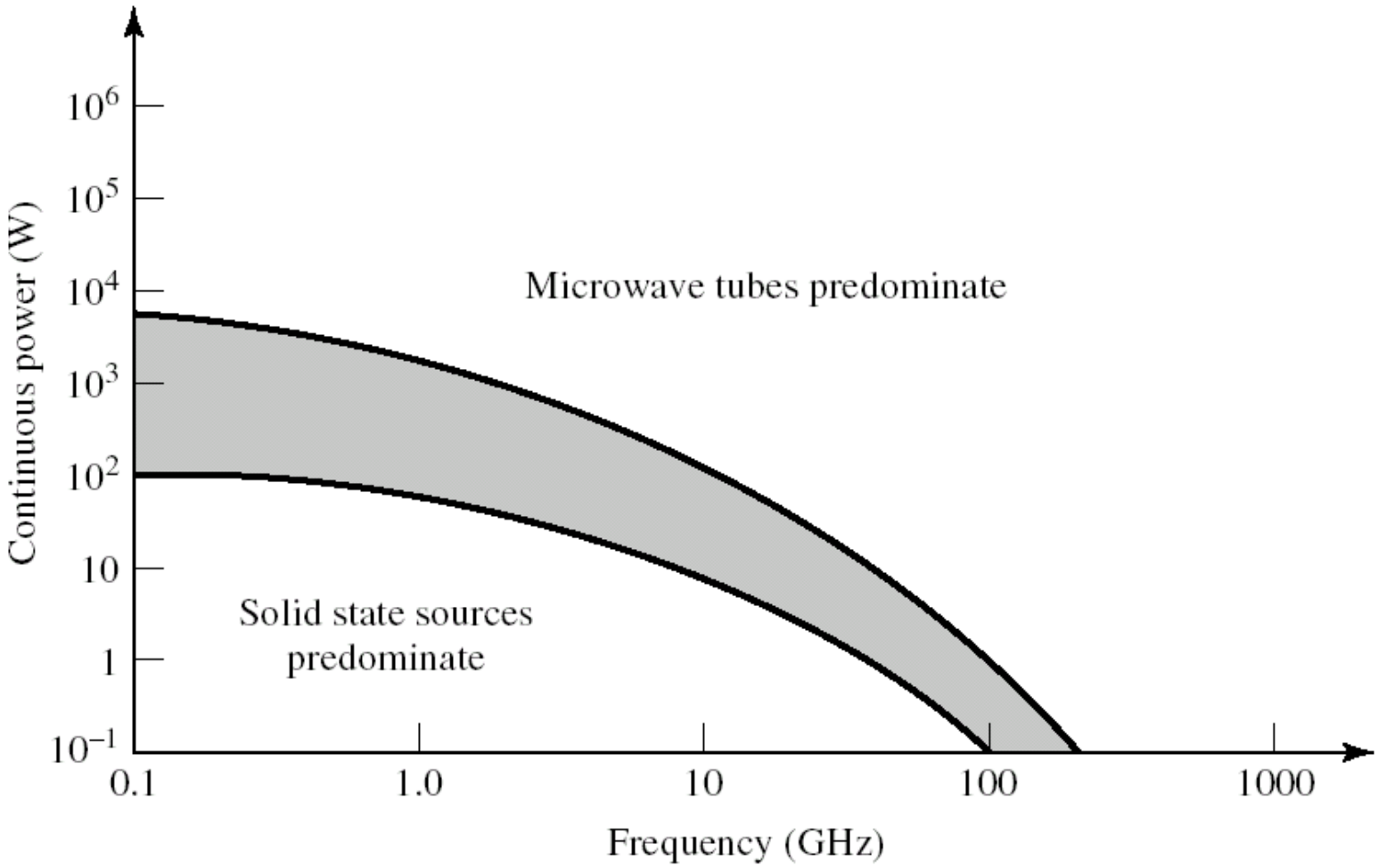

Circuite integrate pentru microunde

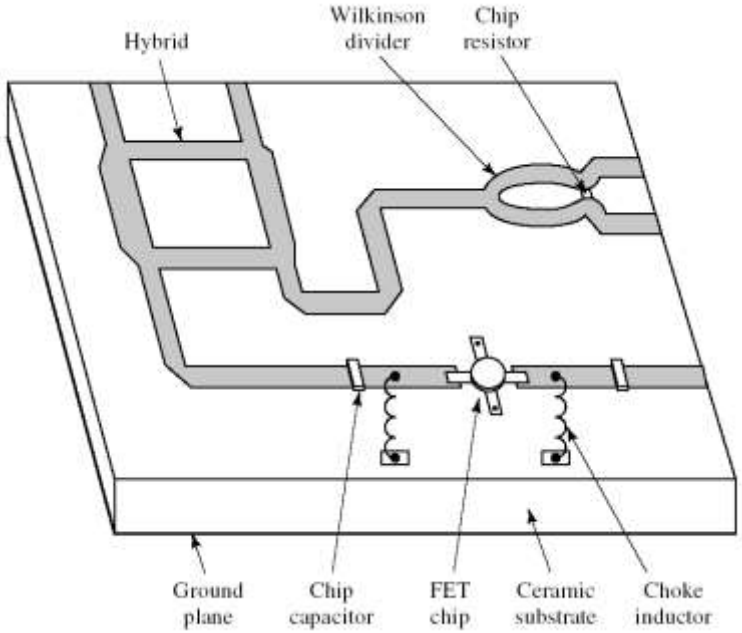

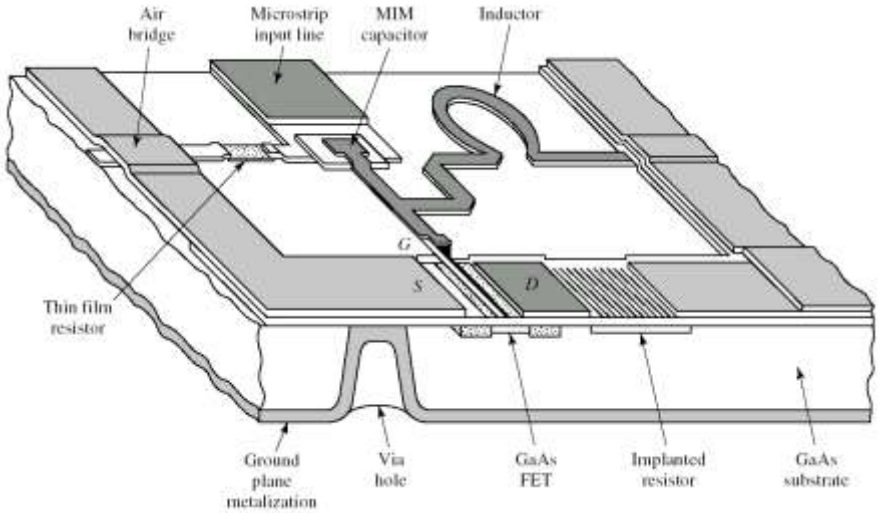

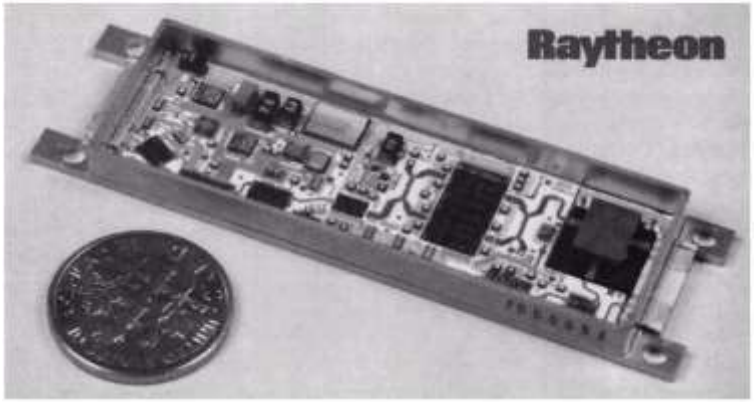

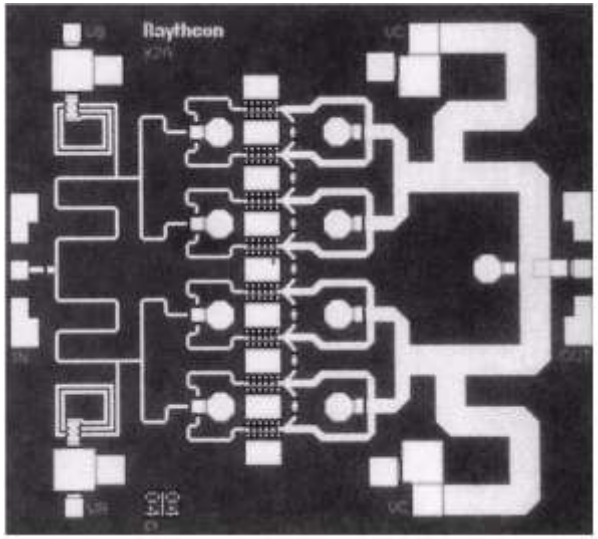

Cuadripol Amplificator (diport)

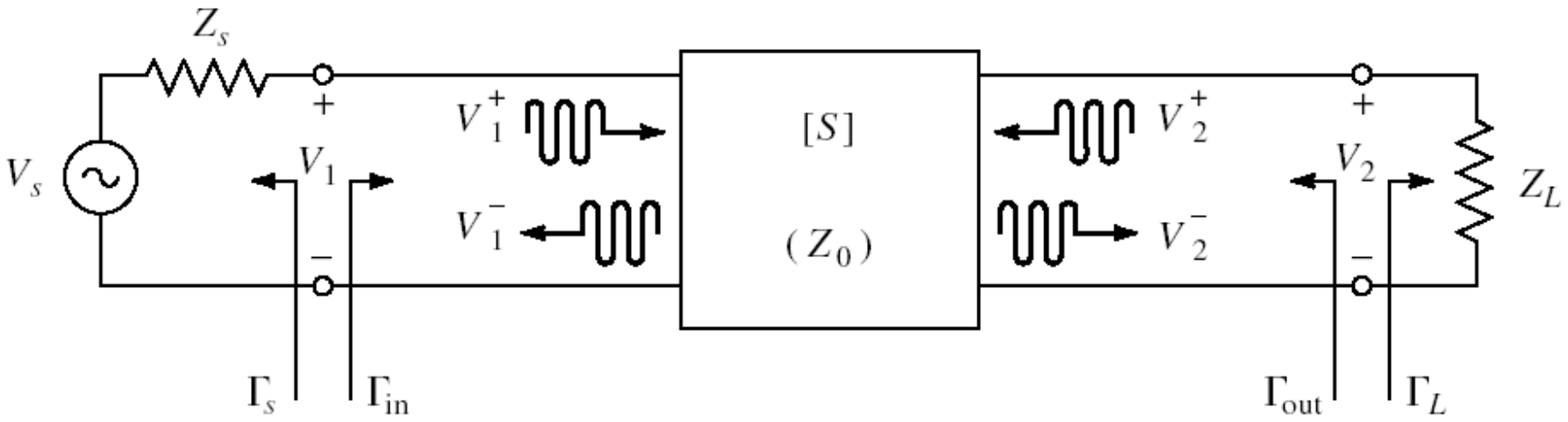

- Caracterizare cu parametri S
- Normalizati la Zo (implicit 50Ω)
- Cataloage: parametri S pentru anumite polarizari

Cataloage

CEL

NE46100 / NE46134

NPN MEDIUM POWER MICROWAVE TRANSISTOR

FEATURES

- **HIGH DYNAMIC RANGE**
- **LOW IM DISTORTION:** -40 dBc
- **HIGH OUTPUT POWER :** 27.5 dBm at TYP
- **LOW NOISE:** 1.5 dB TYP at 500 MHz
- **LOW COST**

NE46134
TYPICAL OUTPUT POWER
vs. INPUT POWER
f = 1.0 GHz, Ic = 100 mA

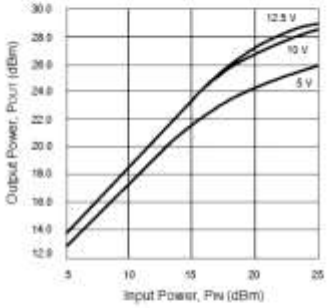

DESCRIPTION

The NE461 series of NPN silicon epitaxial bipolar transistors is designed for medium power applications requiring high dynamic range. This device exhibits an outstanding combination of high gain and low intermodulation distortion, as well as low noise figure. The NE461 series offers excellent performance and reliability at low cost through titanium, platinum, gold metallization system and direct nitride passivation of the surface of the chip. Devices are available in a low cost surface mount package (SOT-89) as well as in chip form.

ELECTRICAL CHARACTERISTICS (TA = 25°C)

PART NUMBER EIAJ[1] REGISTERED NUMBER PACKAGE OUTLINE			NE46100 00 (CHIP)			NE46134 2SC4536 34		
SYMBOLS	PARAMETERS AND CONDITIONS	UNITS	MIN	TYP	MAX	MIN	TYP	MAX
f_T	Gain Bandwidth Product at V_{CE} = 10 V, I_C = 100 mA	GHz		5.5			5.5	
NF_{MIN}	Minimum Noise Figure[3] at V_{CE} = 10 V, I_C = 50 mA, 500 MHz V_{CE} = 10 V, I_C = 50 mA, 1 GHz	dB dB		1.5 2.0			1.5 2.0	
G_L	Linear Gain, V_{CE} = 12.5 V, I_C = 100 mA, 2.0 GHz V_{CE} = 12.5 V, I_C = 100 mA, 1.0 GHz	dB dB		9.0			8.0	
$\|S_{21E}\|^2$	Insertion Power Gain at 10 V, 50 mA, f = 1.0 GHz	dB		10.0		5.5	7.0	
h_{FE}	DC Current Gain[2] at V_{CE} = 10 V, I_C = 50 mA		40		200	40		200
I_{CBO}	Collector Cutoff Current at V_{CB} = 20 V, I_E = 0 mA	µA			5.0			5.0
I_{EBO}	Emitter Cutoff Current at V_{EB} = 2 V, I_C = 0 mA	µA			5.0			5.0
P_{1dB}	Output Power at 1 dB Compression, V_{CE} = 12.5 V, I_C = 100 mA, 2.0 GHz V_{CE} = 12.5 V, I_C = 100 mA, 1.0 GHz	dBm dBm	27.0				27.5	
IM3	Intermodulation Distortion, 10 V, 100 mA, F1 = 1.0 GHz, F2 = 0.99 GHz,							

Cataloage

NE46100

VCE = 5 V, IC = 50 mA

FREQUENCY	S_{11}		S_{21}		S_{12}		S_{22}		K	MAG^2
(MHz)	MAG	ANG	MAG	ANG	MAG	ANG	MAG	ANG		(dB)
100	0.778	-137	26.776	114	0.028	30	0.555	-102	0.16	29.8
200	0.815	-159	14.407	100	0.035	29	0.434	-135	0.36	26.2
500	0.826	-177	5.855	84	0.040	38	0.400	-162	0.75	21.7
800	0.827	176	3.682	76	0.052	43	0.402	-169	0.91	18.5
1000	0.826	173	2.963	71	0.058	47	0.405	-172	1.02	16.3
1200	0.825	170	2.441	66	0.064	47	0.412	-174	1.08	14.0
1400	0.820	167	2.111	61	0.069	47	0.413	-176	1.17	12.4
1600	0.828	165	1.863	57	0.078	54	0.426	-177	1.15	11.4
1800	0.827	162	1.671	53	0.087	50	0.432	-178	1.14	10.6
2000	0.828	159	1.484	49	0.093	50	0.431	-180	1.17	9.5
2500	0.822	153	1.218	39	0.11	48	0.462	177	1.18	7.8
3000	0.818	148	1.010	30	0.135	46	0.490	174	1.16	6.3
3500	0.824	142	0.876	21	0.147	44	0.507	170	1.16	5.3
4000	0.812	137	0.762	13	0.168	38	0.535	167	1.14	4.3

VCE = 5 V, IC = 100 mA

100	0.778	-144	27.669	111	0.027	35	0.523	-114	0.27	30.2
200	0.820	-164	14.559	97	0.029	29	0.445	-144	0.42	27.0
500	0.832	-179	5.885	84	0.035	38	0.435	-166	0.81	22.2
800	0.833	175	3.691	76	0.048	45	0.435	-173	0.95	18.8
1000	0.831	172	2.980	71	0.056	51	0.437	-176	1.05	16.0
1200	0.836	169	2.464	67	0.061	52	0.432	-178	1.11	14.0
1400	0.829	166	2.121	61	0.072	53	0.447	-180	1.12	12.6
1600	0.831	164	1.867	58	0.080	54	0.445	179	1.14	11.4

Cataloage

NE46100, NE46134

TYPICAL COMMON EMITTER SCATTERING PARAMETERS[1] (T_A = 25°C)

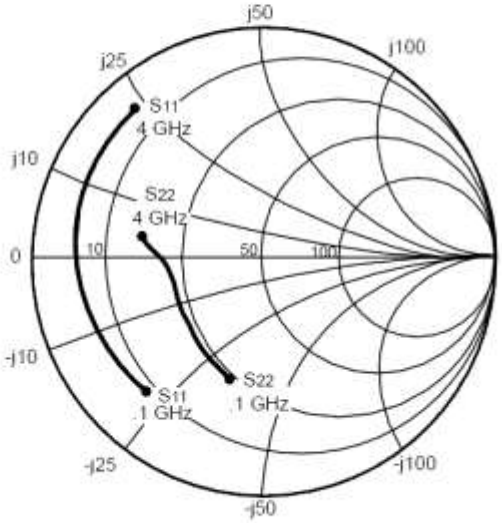

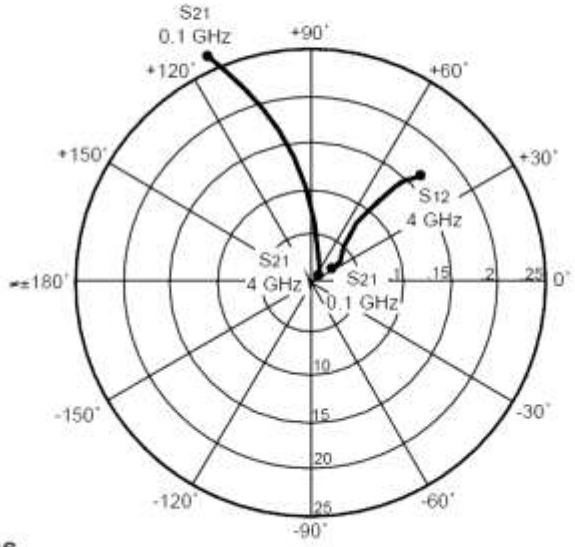

Coordinates in Ohms
Frequency in GHz
V_{CE} = 5 V, I_C = 50 mA

S2P - Touchstone

- Fisiere format Touchstone (*.s2p)

```
! SIEMENS Small Signal Semiconductors
! VDS = 3.5 V     ID = 15 mA
# GHz  S  MA  R  50
!  f        S11          S21          S12          S22
! GHz     MAG   ANG      MAG   ANG      MAG   ANG      MAG   ANG
 1.000 0.9800  -18.0   2.230  157.0  0.0240   74.0  0.6900  -15.0
 2.000 0.9500  -39.0   2.220  136.0  0.0450   57.0  0.6600  -30.0
 3.000 0.8900  -64.0   2.210  110.0  0.0680   40.0  0.6100  -45.0
 4.000 0.8200  -89.0   2.230   86.0  0.0850   23.0  0.5600  -62.0
 5.000 0.7400 -115.0   2.190   61.0  0.0990    7.0  0.4900  -80.0
 6.000 0.6500 -142.0   2.110   36.0  0.1070  -10.0  0.4100  -98.0
!
!  f      Fmin   Gammaopt  rn/50
! GHz       dB    MAG  ANG    -
 2.000     1.00  0.72   27   0.84
 4.000     1.40  0.64   61   0.58
```

Parametri S

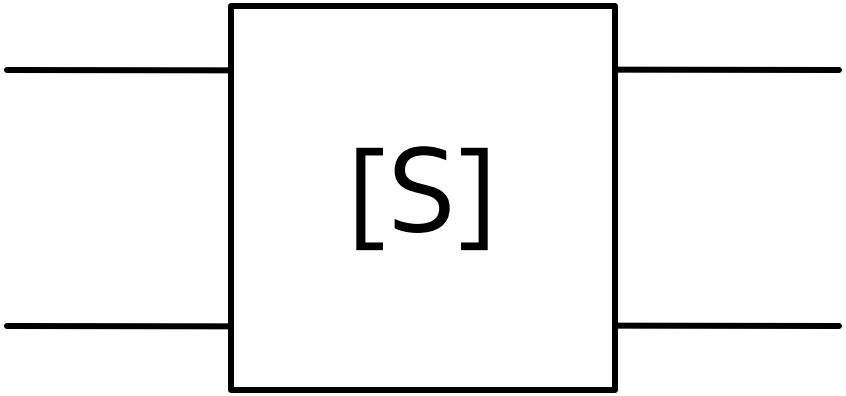

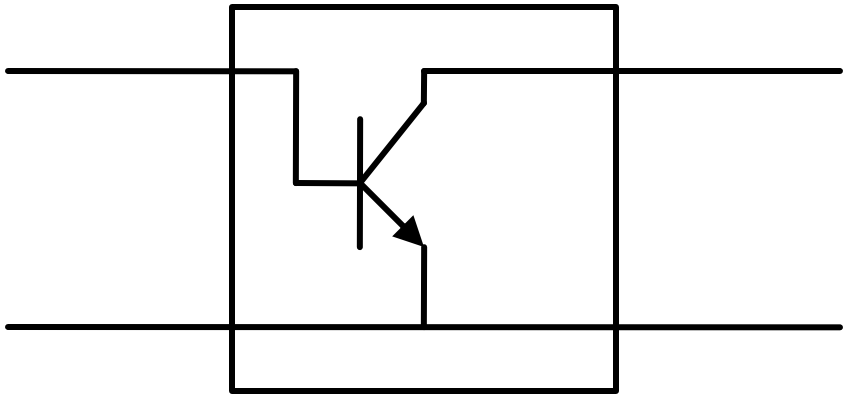

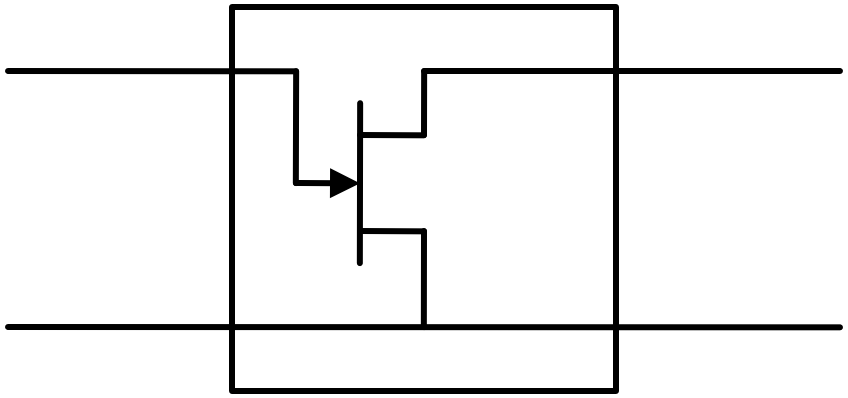

Diport amplificator

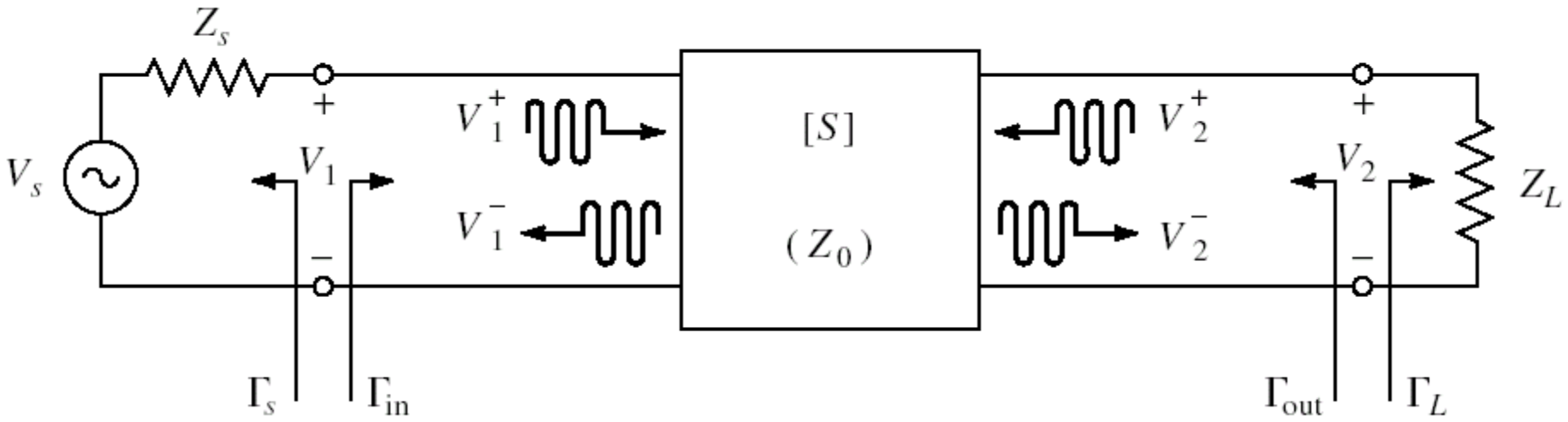

$$\Gamma_L = \frac{Z_L - Z_0}{Z_L + Z_0} \qquad \Gamma_S = \frac{Z_S - Z_0}{Z_S + Z_0} \qquad \begin{bmatrix} V_1^- \\ V_2^- \end{bmatrix} = \begin{bmatrix} S_{11} & S_{12} \\ S_{21} & S_{22} \end{bmatrix} \cdot \begin{bmatrix} V_1^+ \\ V_2^+ \end{bmatrix}$$

$$\Gamma_L = \frac{V_2^+}{V_2^-}$$

$$V_1^- = S_{11} \cdot V_1^+ + S_{12} \cdot V_2^+ = S_{11} \cdot V_1^+ + S_{12} \cdot \Gamma_L \cdot V_2^-$$

$$V_2^- = S_{21} \cdot V_1^+ + S_{22} \cdot V_2^+ = S_{21} \cdot V_1^+ + S_{22} \cdot \Gamma_L \cdot V_2^-$$

Diport amplificator

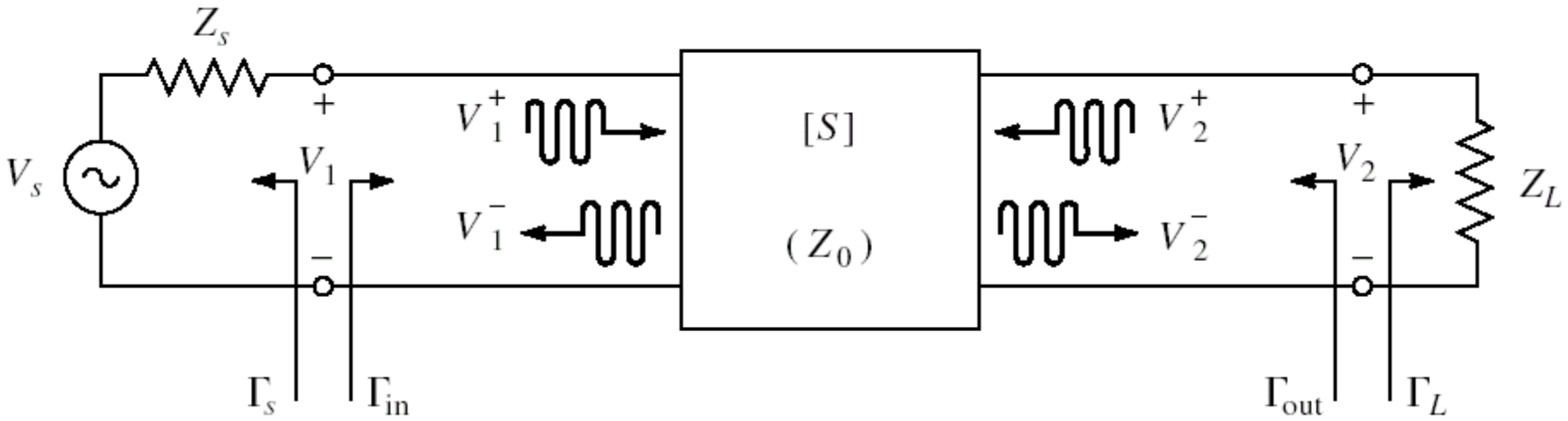

$$V_1^- = S_{11} \cdot V_1^+ + S_{12} \cdot V_2^+ = S_{11} \cdot V_1^+ + S_{12} \cdot \Gamma_L \cdot V_2^-$$

$$V_2^- = S_{21} \cdot V_1^+ + S_{22} \cdot V_2^+ = S_{21} \cdot V_1^+ + S_{22} \cdot \Gamma_L \cdot V_2^-$$

- similar

$$\Gamma_{in} = \frac{V_1^-}{V_1^+} = S_{11} + \frac{S_{12} \cdot S_{21} \cdot \Gamma_L}{1 - S_{22} \cdot \Gamma_L}$$

$$\Gamma_{out} = \frac{V_2^-}{V_2^+} = S_{22} + \frac{S_{12} \cdot S_{21} \cdot \Gamma_S}{1 - S_{11} \cdot \Gamma_S}$$

Diport amplificator

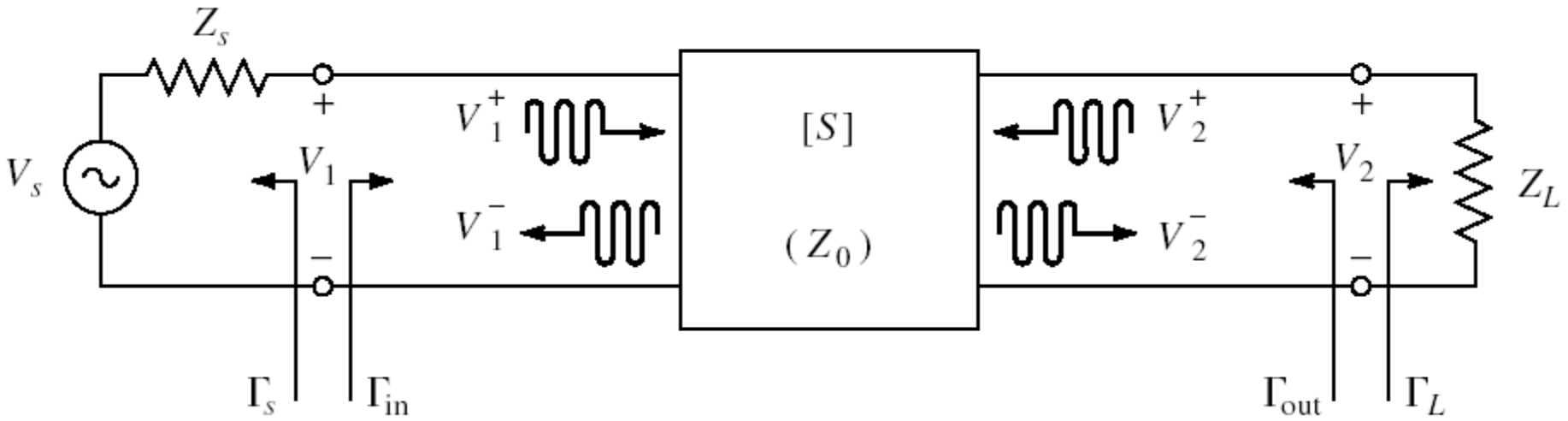

$$\Gamma_{in} = \frac{V_1^-}{V_1^+} = S_{11} + \frac{S_{12} \cdot S_{21} \cdot \Gamma_L}{1 - S_{22} \cdot \Gamma_L}$$

$$\Gamma_{out} = \frac{V_2^-}{V_2^+} = S_{22} + \frac{S_{12} \cdot S_{21} \cdot \Gamma_S}{1 - S_{11} \cdot \Gamma_S}$$

Puteri

$$\Gamma_{in} = \frac{V_1^-}{V_1^+} = S_{11} + \frac{S_{12} \cdot S_{21} \cdot \Gamma_L}{1 - S_{22} \cdot \Gamma_L}$$

$$\Gamma_{in} = \frac{Z_{in} - Z_0}{Z_{in} + Z_0}$$

$$V_1 = \frac{V_S \cdot Z_{in}}{Z_S + Z_{in}} = V_1^+ + V_1^- = V_1^+ \cdot (1 + \Gamma_{in})$$

$$V_1^+ = \frac{V_S}{2} \frac{(1 - \Gamma_S)}{(1 - \Gamma_S \cdot \Gamma_{in})}$$

- C2

$$P_{in} = \frac{1}{2 \cdot Z_0} \cdot \left|V_1^+\right|^2 \cdot \left(1 - \left|\Gamma_{in}\right|^2\right)$$

$$P_L = \frac{1}{2 \cdot Z_0} \cdot \left|V_2^-\right|^2 \cdot \left(1 - \left|\Gamma_L\right|^2\right)$$

$$P_{in} = \frac{\left|V_S\right|^2}{8 \cdot Z_0} \cdot \frac{\left|1 - \Gamma_S\right|^2}{\left|1 - \Gamma_S \cdot \Gamma_{in}\right|^2} \left(1 - \left|\Gamma_{in}\right|^2\right)$$

$$V_2^- = S_{21} \cdot V_1^+ + S_{22} \cdot V_2^+ = S_{21} \cdot V_1^+ + S_{22} \cdot \Gamma_L \cdot V_2^-$$

$$V_2^- = \frac{S_{21} \cdot V_1^+}{1 - S_{22} \cdot \Gamma_L}$$

$$P_L = \frac{\left|V_1^+\right|^2}{2 \cdot Z_0} \cdot \frac{\left|S_{21}\right|^2}{\left|1 - S_{22} \cdot \Gamma_L\right|^2} \left(1 - \left|\Gamma_L\right|^2\right)$$

$$P_L = \frac{\left|V_S\right|^2}{8 \cdot Z_0} \cdot \frac{\left|S_{21}\right|^2 \cdot \left(1 - \left|\Gamma_L\right|^2\right)}{\left|1 - S_{22} \cdot \Gamma_L\right|^2} \cdot \frac{\left|1 - \Gamma_S\right|^2}{\left|1 - \Gamma_S \cdot \Gamma_{in}\right|^2}$$

Puteri

- Puteri

$$P_{in} = \frac{|V_S|^2}{8 \cdot Z_0} \cdot \frac{|1-\Gamma_S|^2}{|1-\Gamma_S \cdot \Gamma_{in}|^2} \left(1-|\Gamma_{in}|^2\right)$$

$$P_L = \frac{|V_S|^2}{8 \cdot Z_0} \cdot \frac{|S_{21}|^2 \cdot \left(1-|\Gamma_L|^2\right)}{|1-S_{22} \cdot \Gamma_L|^2} \cdot \frac{|1-\Gamma_S|^2}{|1-\Gamma_S \cdot \Gamma_{in}|^2}$$

- Puterea disponibila de la sursa

$$P_{av\,S} = P_{in}\big|_{\Gamma_{in}=\Gamma_S^*} = \frac{|V_S|^2}{8 \cdot Z_0} \cdot \frac{|1-\Gamma_S|^2}{\left(1-|\Gamma_S|^2\right)}$$

- Puterea disponibila la sarcina

$$P_{av\,L} = P_L\big|_{\Gamma_L=\Gamma_{out}^*} = \frac{|V_S|^2}{8 \cdot Z_0} \cdot \frac{|S_{21}|^2 \cdot |1-\Gamma_S|^2}{|1-S_{11} \cdot \Gamma_S|^2 \cdot \left(1-|\Gamma_{out}|^2\right)}$$

Castig de putere

- Castigul de putere

$$G = \frac{P_L}{P_{in}} = \frac{|S_{21}|^2 \cdot \left(1 - |\Gamma_L|^2\right)}{\left(1 - |\Gamma_{in}|^2\right) \cdot |1 - S_{22} \cdot \Gamma_L|^2}$$

$$P_{in} = P_{in}\left(\Gamma_S, \Gamma_{in}\left(\Gamma_L\right), S\right)$$

$$P_L = P_L\left(\Gamma_S, \Gamma_{in}\left(\Gamma_L\right), S\right)$$

- Castigul **introdus** efectiv de amplificator este mai putin important deoarece un castig mai mare poate fi insotit de o **scadere** a puterii de intrare (absorbita efectiv de la sursa)
- Se prefera caracterizarea efectului amplificatorului prin analiza puterii **efectiv obtinuta pe sarcina** in raport cu puterea **disponibila de la sursa** (constanta)

Castig de putere

- Castigul de putere **disponibil**

$$G_A = \frac{P_{av\,L}}{P_{av\,S}} = \frac{|S_{21}|^2 \cdot \left(1-|\Gamma_S|^2\right)}{|1-S_{22}\cdot\Gamma_L|^2 \cdot \left(1-|\Gamma_{out}|^2\right)}$$

- Castigul de putere de **transfer** (transducer power gain)

$$G_T = \frac{P_L}{P_{av\,S}} = \frac{|S_{21}|^2 \cdot \left(1-|\Gamma_S|^2\right)\cdot\left(1-|\Gamma_L|^2\right)}{|1-\Gamma_S\cdot\Gamma_{in}|^2 \cdot |1-S_{22}\cdot\Gamma_L|^2}$$

$$\Gamma_{in} = \Gamma_{in}\left(\Gamma_L\right)$$

- Castigul de putere de **transfer unilateral**

$$G_{TU} = |S_{21}|^2 \cdot \frac{1-|\Gamma_S|^2}{|1-S_{11}\cdot\Gamma_S|^2} \cdot \frac{1-|\Gamma_L|^2}{|1-S_{22}\cdot\Gamma_L|^2}$$

$$S_{12} \cong 0 \qquad \Gamma_{in} = S_{11}$$

Permite tratarea separata a intrarii si iesirii

Cuadripol Amplificator

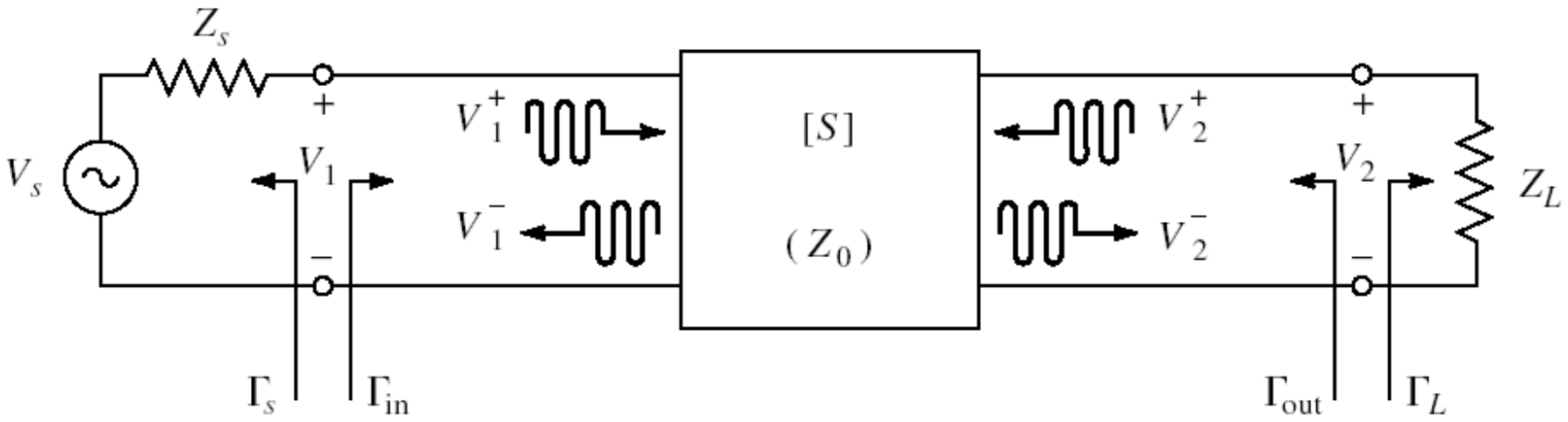

- marimi care intereseaza:
  - stabilitate
  - castig de putere
  - zgomot (uneori – semnal mic)
  - liniaritate (uneori – semnal mare)

Stabilitate

- C4 $\Gamma = \Gamma_r + j \cdot \Gamma_i$ $r_L = \dfrac{1-\Gamma_r^2-\Gamma_i^2}{(1-\Gamma_r)^2+\Gamma_i^2}$

  Z_{in} $\Gamma_{in} = \Gamma_r + j \cdot \Gamma_i$

- instabilitate

  $\mathrm{Re}\{Z_{in}\} < 0 \Leftrightarrow 1-\Gamma_r^2-\Gamma_i^2 < 0$ $|\Gamma_{in}| > 1$

- stabilitate, Z_{in}
  - conditii ce trebuie indeplinite de Γ_L pentru a obtine stabilitatea (la intrare)

    $|\Gamma_{in}| < 1$ $\left| S_{11} + \dfrac{S_{12} \cdot S_{21} \cdot \Gamma_L}{1 - S_{22} \cdot \Gamma_L} \right| < 1$

- similar Z_{out}
  - conditii ce trebuie indeplinite de Γ_S pentru a obtine stabilitatea (la iesire)

Stabilitate

$$|\Gamma_{in}| < 1 \qquad \left| S_{11} + \frac{S_{12} \cdot S_{21} \cdot \Gamma_L}{1 - S_{22} \cdot \Gamma_L} \right| < 1$$

- Obtinem conditiile ce trebuie indeplinite de Γ_L pentru a obtine stabilitatea

$$|\Gamma_{out}| < 1 \qquad \left| S_{22} + \frac{S_{12} \cdot S_{21} \cdot \Gamma_S}{1 - S_{11} \cdot \Gamma_S} \right| < 1$$

- Obtinem conditiile ce trebuie indeplinite de Γ_S , Γ_L pentru a obtine stabilitatea

Stabilitate

$$|\Gamma_{in}| < 1 \qquad \left| S_{11} + \frac{S_{12} \cdot S_{21} \cdot \Gamma_L}{1 - S_{22} \cdot \Gamma_L} \right| < 1$$

- Limita de stabilitate/instabilitate

$$|\Gamma_{in}| = 1 \qquad \left| S_{11} + \frac{S_{12} \cdot S_{21} \cdot \Gamma_L}{1 - S_{22} \cdot \Gamma_L} \right| = 1$$

$$\left| S_{11} \cdot (1 - S_{22} \cdot \Gamma_L) + S_{12} \cdot S_{21} \cdot \Gamma_L \right| = \left| 1 - S_{22} \cdot \Gamma_L \right|$$

- Determinantul matricii S $\qquad \Delta = S_{11} \cdot S_{22} - S_{12} \cdot S_{21}$

$$\left| S_{11} - \Delta \cdot \Gamma_L \right| = \left| 1 - S_{22} \cdot \Gamma_L \right|$$

$$\left| S_{11} - \Delta \cdot \Gamma_L \right|^2 = \left| 1 - S_{22} \cdot \Gamma_L \right|^2$$

Stabilitate

$$\left|S_{11}-\Delta\cdot\Gamma_L\right|^2=\left|1-S_{22}\cdot\Gamma_L\right|^2$$

$$a\cdot a^*=\left|a\right|\cdot e^{j\theta}\cdot\left|a\right|\cdot e^{-j\theta}=\left|a\right|^2$$

$$\left|a+b\right|^2=(a+b)\cdot(a+b)^*=(a+b)\cdot\left(a^*+b^*\right)=\left|a\right|^2+\left|b\right|^2+a^*\cdot b+a\cdot b^*$$

$$\left|S_{11}\right|^2+\left|\Delta\right|^2\cdot\left|\Gamma_L\right|^2-\left(\Delta\cdot\Gamma_L\cdot S_{11}^*+\Delta^*\cdot\Gamma_L^*\cdot S_{11}\right)=1+\left|S_{22}\right|^2\cdot\left|\Gamma_L\right|^2-\left(S_{22}^*\cdot\Gamma_L^*+S_{22}\cdot\Gamma_L\right)$$

$$\left(\left|S_{22}\right|^2-\left|\Delta\right|^2\right)\cdot\Gamma_L\cdot\Gamma_L^*-\left(S_{22}-\Delta\cdot S_{11}^*\right)\cdot\Gamma_L-\left(S_{22}^*-\Delta^*\cdot S_{11}\right)\cdot\Gamma_L^*=\left|S_{11}\right|^2-1$$

$$\Gamma_L\cdot\Gamma_L^*-\frac{\left(S_{22}-\Delta\cdot S_{11}^*\right)\cdot\Gamma_L+\left(S_{22}^*-\Delta^*\cdot S_{11}\right)\cdot\Gamma_L^*}{\left|S_{22}\right|^2-\left|\Delta\right|^2}=\frac{\left|S_{11}\right|^2-1}{\left|S_{22}\right|^2-\left|\Delta\right|^2}$$

$$+\frac{\left|S_{22}-\Delta\cdot S_{11}^*\right|^2}{\left(\left|S_{22}\right|^2-\left|\Delta\right|^2\right)^2}$$

$$\left|\Gamma_L-\frac{\left(S_{22}-\Delta\cdot S_{11}^*\right)^*}{\left|S_{22}\right|^2-\left|\Delta\right|^2}\right|^2=\frac{\left|S_{11}\right|^2-1}{\left|S_{22}\right|^2-\left|\Delta\right|^2}+\frac{\left|S_{22}-\Delta\cdot S_{11}^*\right|^2}{\left(\left|S_{22}\right|^2-\left|\Delta\right|^2\right)^2}$$

Stabilitate

$$\left|\Gamma_L - \frac{\left(S_{22} - \Delta \cdot S_{11}^*\right)^*}{|S_{22}|^2 - |\Delta|^2}\right| = \left|\frac{S_{12} \cdot S_{21}}{|S_{22}|^2 - |\Delta|^2}\right|$$

$$|\Gamma - \Gamma_0| = R$$

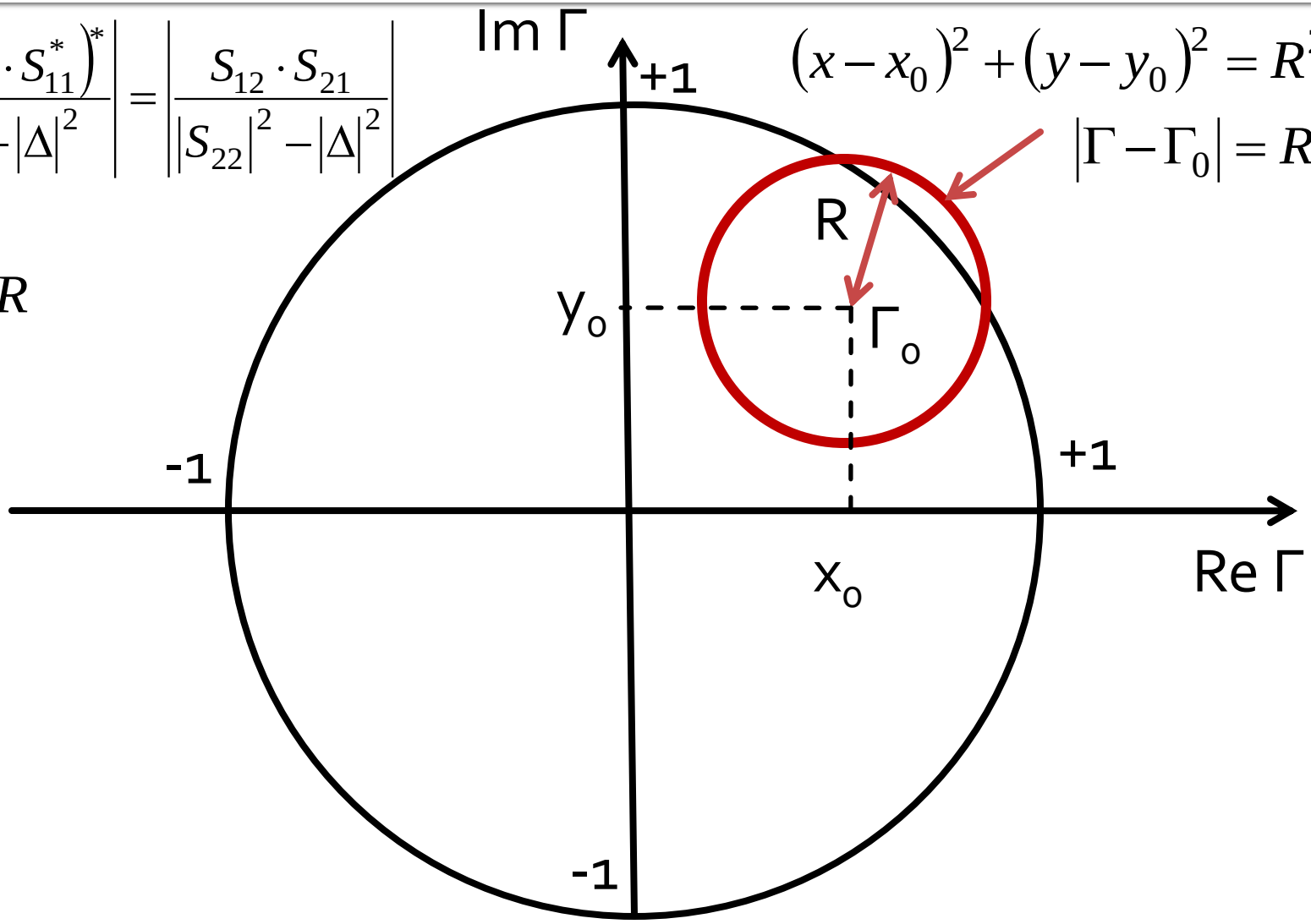

$$(x - x_0)^2 + (y - y_0)^2 = R^2$$

$$|\Gamma - \Gamma_0| = R$$

Cerc de stabilitate la iesire

$$\left|\Gamma_L - \frac{\left(S_{22} - \Delta \cdot S_{11}^*\right)^*}{|S_{22}|^2 - |\Delta|^2}\right| = \left|\frac{S_{12} \cdot S_{21}}{|S_{22}|^2 - |\Delta|^2}\right| \qquad |\Gamma_L - C_L| = R_L$$

- Ecuatia unui cerc, care reprezinta locul geometric al punctelor Γ_L pentru **limita** de stabilitate
- Cercul se numeste **cerc de stabilitate la iesire** (Γ_L)

$$C_L = \frac{\left(S_{22} - \Delta \cdot S_{11}^*\right)^*}{|S_{22}|^2 - |\Delta|^2} \qquad R_L = \frac{|S_{12} \cdot S_{21}|}{\left||S_{22}|^2 - |\Delta|^2\right|}$$

Cerc de stabilitate la intrare

- Similar

$$|\Gamma_{out}| = 1 \qquad \left| S_{22} + \frac{S_{12} \cdot S_{21} \cdot \Gamma_S}{1 - S_{11} \cdot \Gamma_S} \right| = 1$$

- Ecuatia unui cerc, care reprezinta locul geometric al punctelor Γ_S pentru **limita** de stabilitate
- Cercul se numeste **cerc de stabilitate la intrare** (Γ_S)

$$C_S = \frac{\left(S_{11} - \Delta \cdot S_{22}^*\right)^*}{|S_{11}|^2 - |\Delta|^2} \qquad R_S = \frac{|S_{12} \cdot S_{21}|}{\left||S_{11}|^2 - |\Delta|^2\right|}$$

Cerc de stabilitate la iesire

- **Cercul de stabilitate la iesire** reprezinta locul geometric al punctelor Γ_L pentru **limita** de stabilitate ($|\Gamma_{in}|=1$)
- Cercul imparte planul complex in doua suprafete, **interiorul** si **exteriorul** cercului
- Cele doua suprafete vor reprezenta zonele Γ_L de stabilitate ($|\Gamma_{in}|<1$) / instabilitate ($|\Gamma_{in}|>1$)

Cerc de stabilitate la iesire

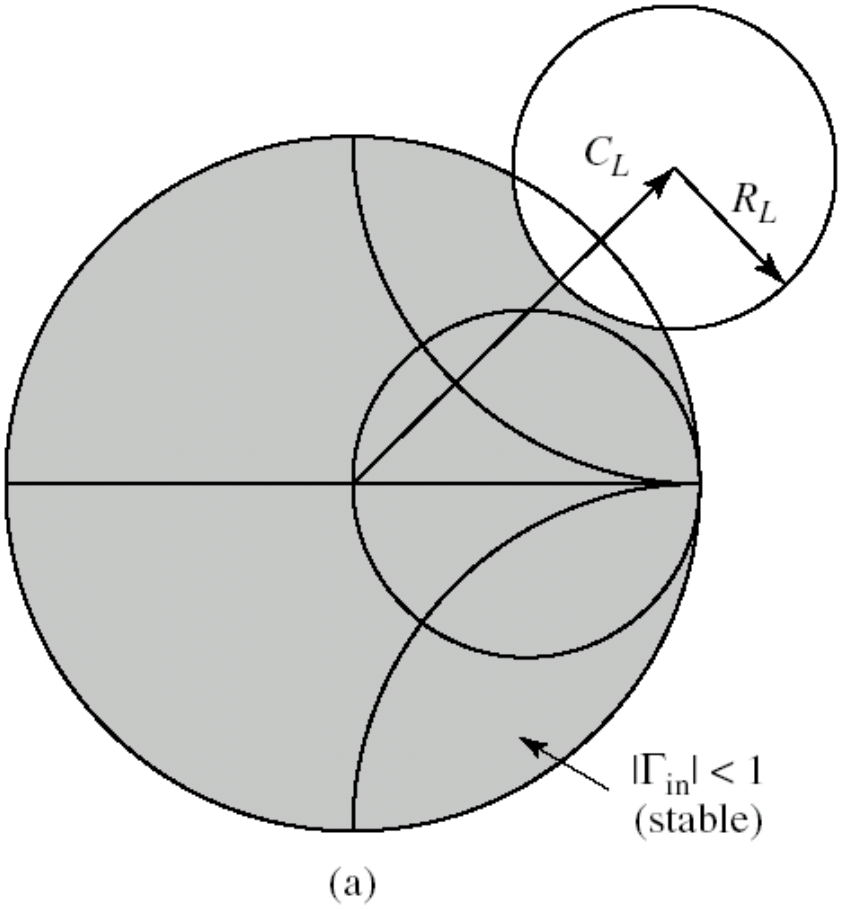

(a)

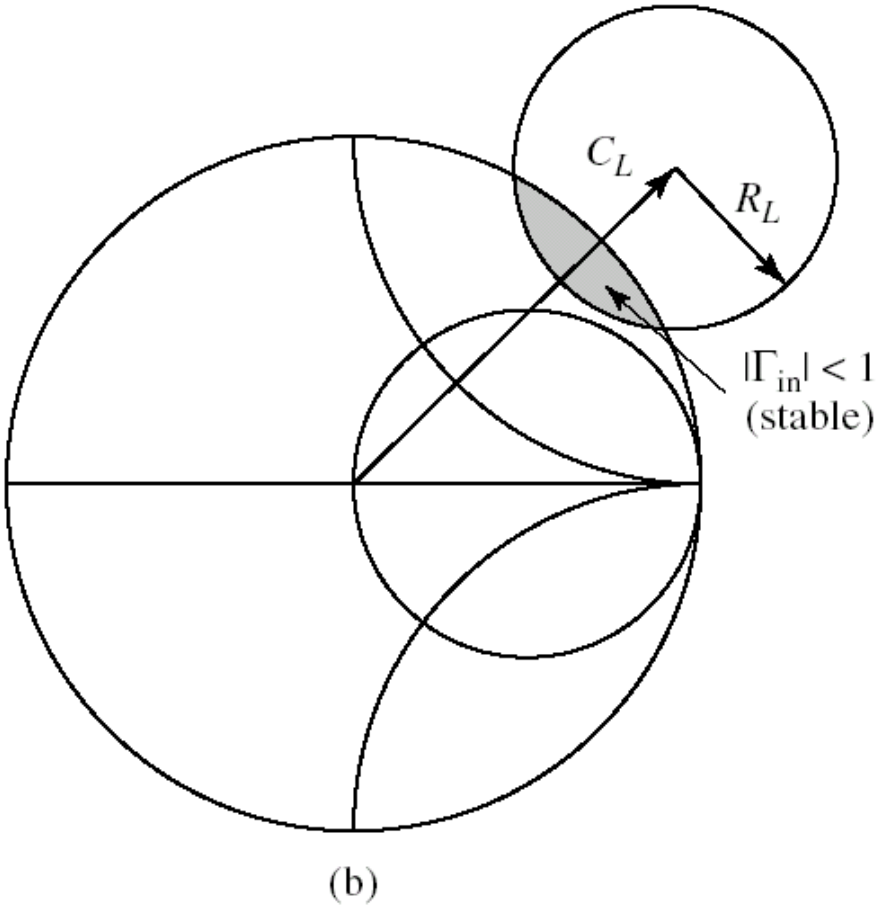

(b)

- Doua cazuri: (a) exterior stabil / (b) interior stabil

Cerc de stabilitate la iesire

- Identificarea zonelor de stabilitate / instabilitate
  - Centrul diagramei Smith: in coordonate polare corespunde lui $\Gamma_L = 0$
  - Coeficientul de reflexie la intrare

$$\Gamma_{in} = S_{11} + \frac{S_{12} \cdot S_{21} \cdot \Gamma_L}{1 - S_{22} \cdot \Gamma_L} \qquad \Gamma_{in}\big|_{\Gamma_L = 0} = S_{11} \qquad \left|\Gamma_{in}\right|_{\Gamma_L = 0} = \left|S_{11}\right|$$

  - Decizia se poate lua in functie de valoarea pe care o are |S11| si de pozitia centrului diagramei Smith fata de cercul de stabilitate

Identificarea zonelor

- Cerc de stabilitate la iesire
  - $|S11| < 1$ → centrul diagramei pe care se reprezinta Γ_L este punct **stabil**, se gaseste in zona stabila (cel mai des)
  - $|S11| > 1$ → centrul diagramei pe care se reprezinta Γ_L este punct **instabil**, se gaseste in zona instabila
- Cerc de stabilitate la intrare
  - $|S22| < 1$ → centrul diagramei pe care se reprezinta Γ_S este punct **stabil**, se gaseste in zona stabila (cel mai des)
  - $|S22| > 1$ → centrul diagramei pe care se reprezinta Γ_S este punct **instabil**, se gaseste in zona instabila

Exemplu

- ATF-34143 **at Vds=3V Id=20mA**.
- @5GHz
  - S11 = 0.64∠139°
  - S12 = 0.119∠-21°
  - S21 = 3.165 ∠16°
  - S22 = 0.22 ∠146°

Calcul

- Parametri S
  - S11 = -0.483+0.42·j
  - S12 = 0.111-0.043·j
  - S21 = 3.042+0.872·j
  - S22 = -0.182+0.123·j
- | S11 | < 1
- | S22 | < 1
- $|C_L| < R_L$ 0∈CSOUT
- $|C_S| > R_S$ 0∉CSIN

$$C_L = \frac{\left(S_{22} - \Delta \cdot S_{11}^*\right)^*}{|S_{22}|^2 - |\Delta|^2} = 3.931 - 0.897 \cdot j$$

$$|C_L| = 4.032$$

$$R_L = \frac{|S_{12} \cdot S_{21}|}{\left||S_{22}|^2 - |\Delta|^2\right|} = 4.891$$

$$C_S = \frac{\left(S_{11} - \Delta \cdot S_{22}^*\right)^*}{|S_{11}|^2 - |\Delta|^2} = -1.871 - 1.265 \cdot j$$

$$|C_S| = 2.259$$

$$R_S = \frac{|S_{12} \cdot S_{21}|}{\left||S_{11}|^2 - |\Delta|^2\right|} = 1.325$$

ADS

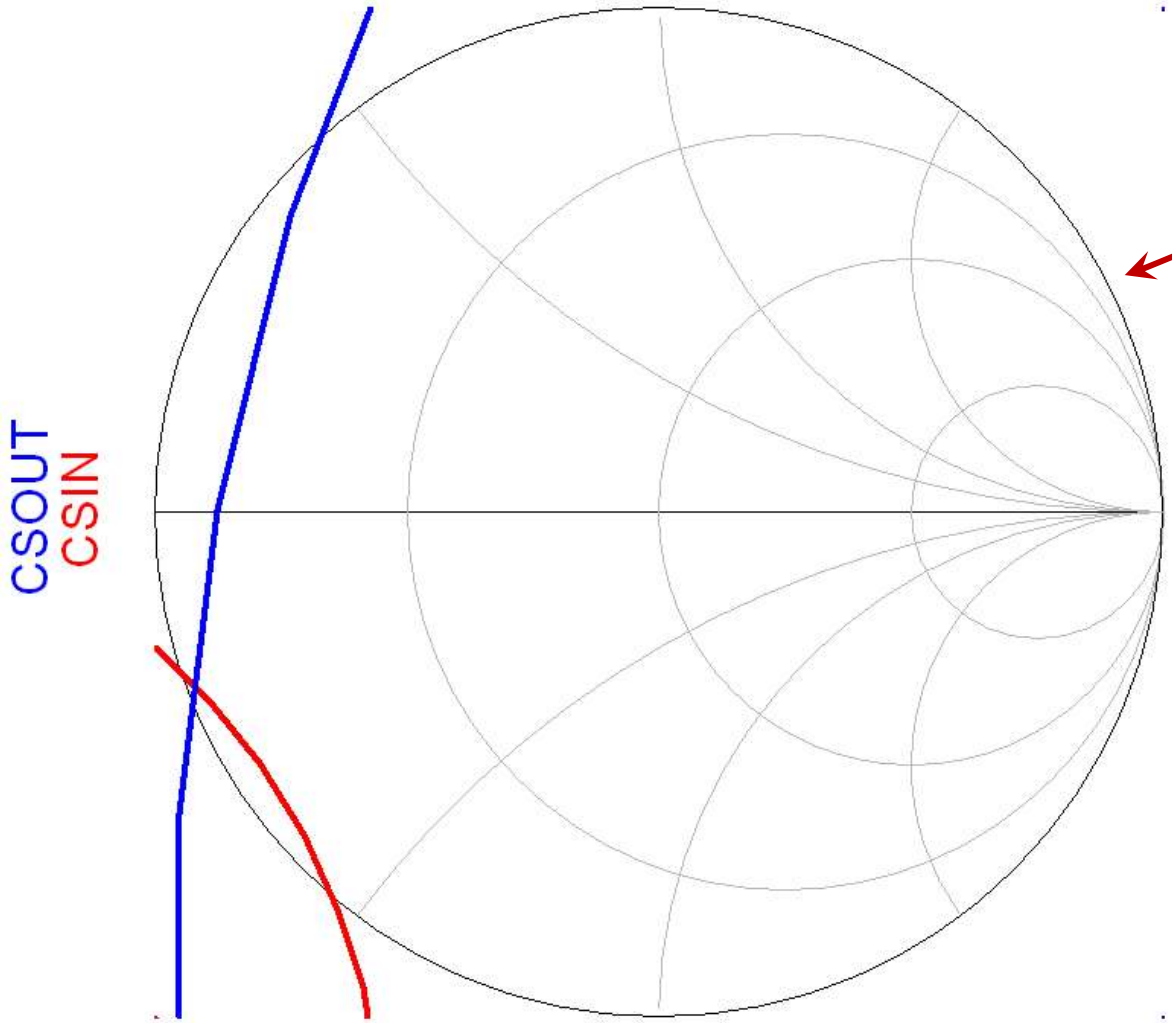

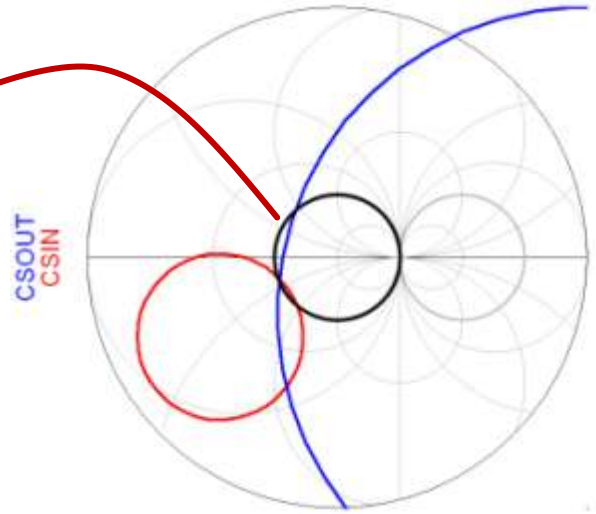

Reprezentare 3D $|\Gamma_{in}|$, $|\Gamma_{out}|$

- Variatii foarte mari ->logaritmic

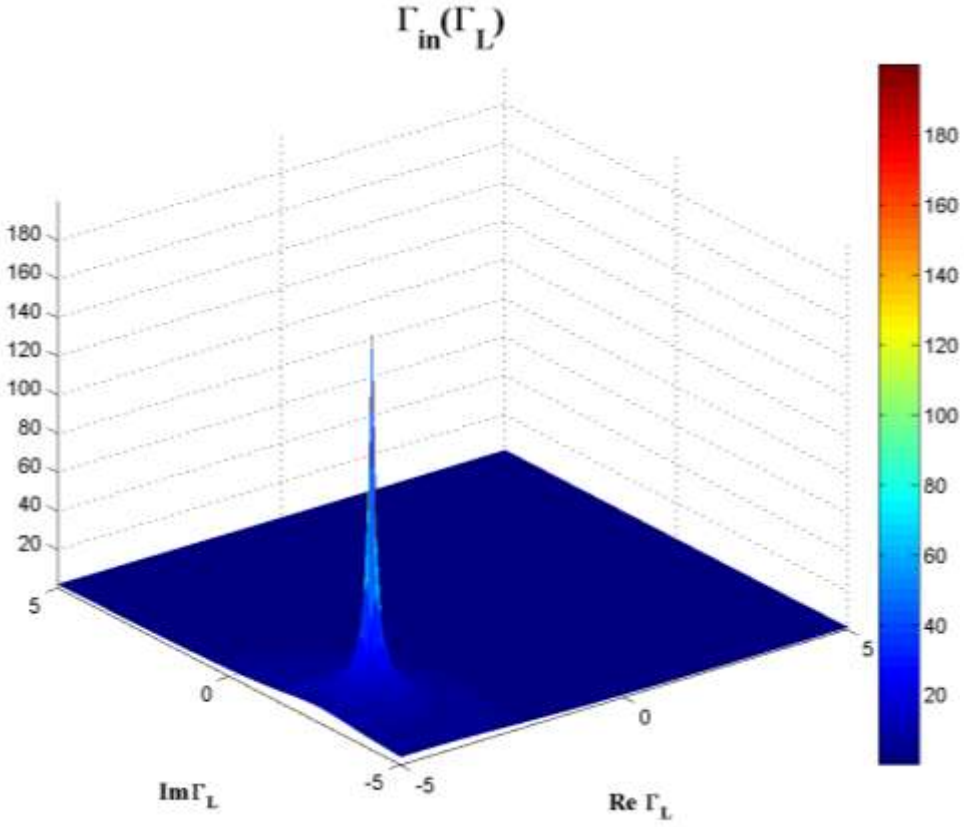

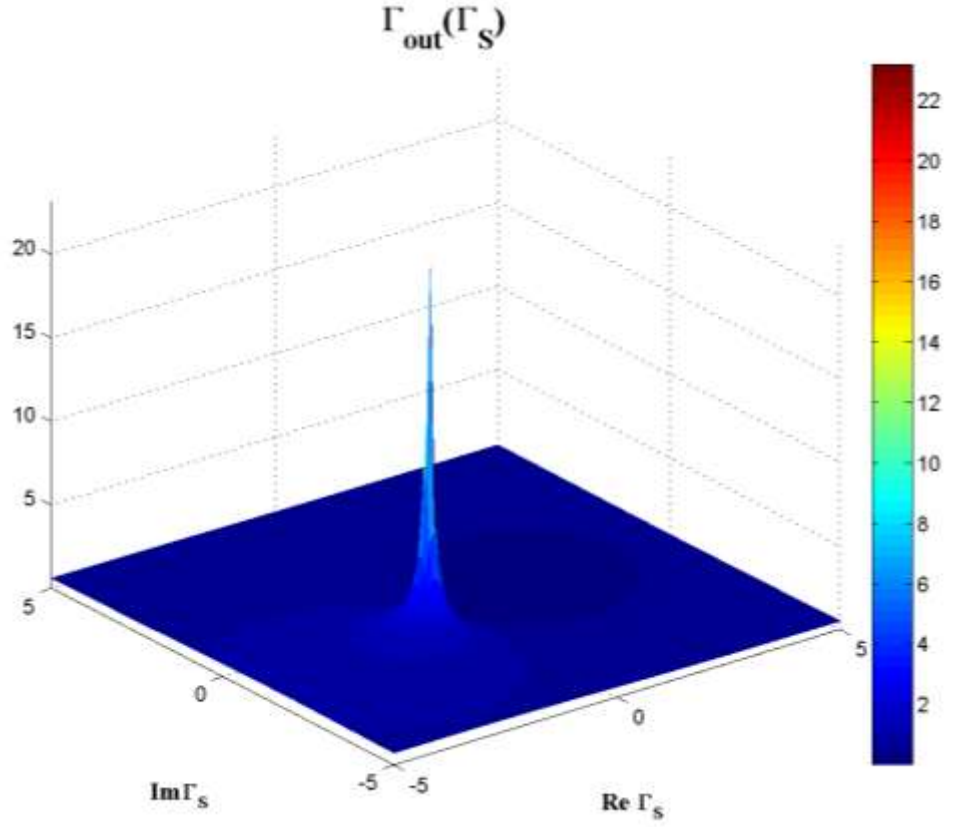

Reprezentare 3D $|\Gamma_{in}|$, $|\Gamma_{out}|$

- $\log_{10}|\Gamma_{in}|$, $\log_{10}|\Gamma_{out}|$

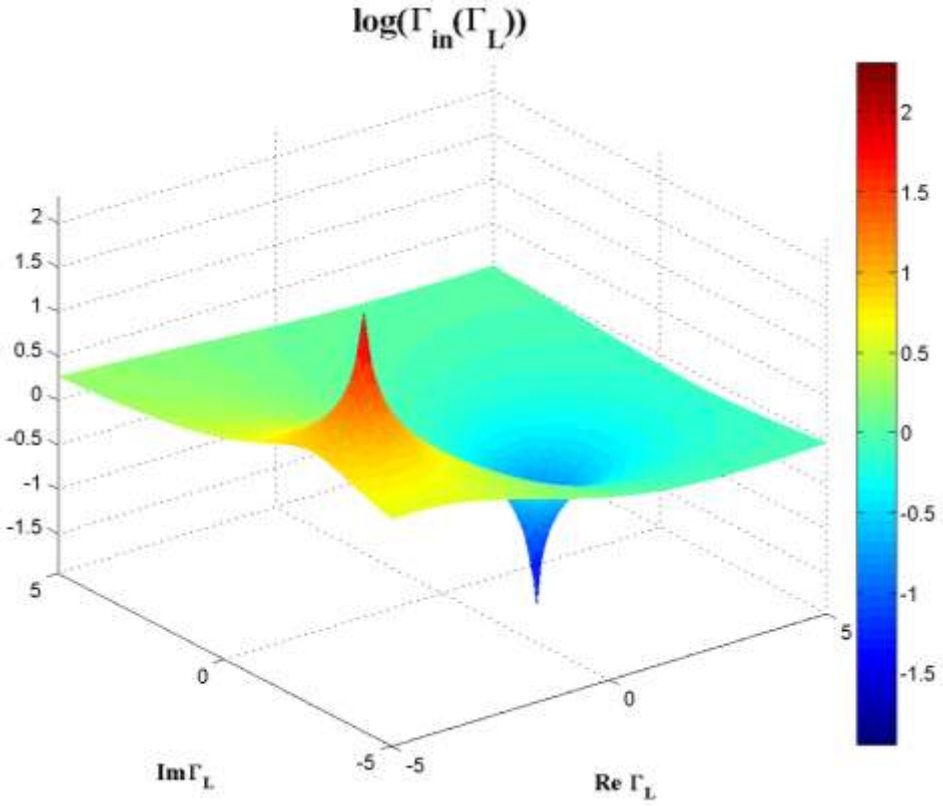

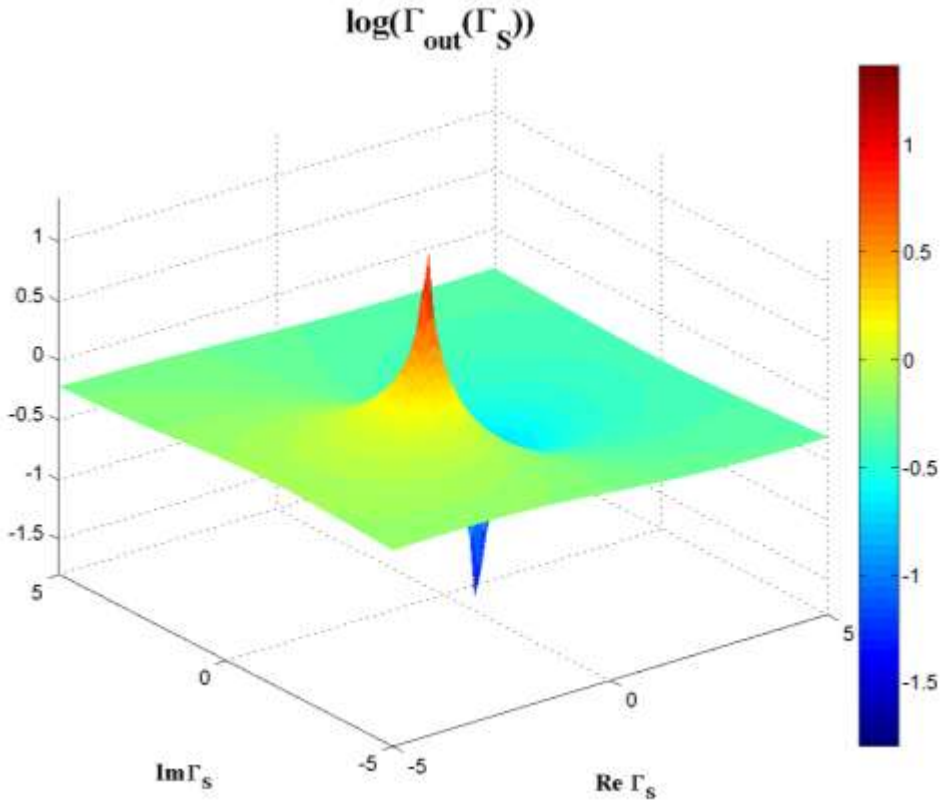

Reprezentare 3D $|\Gamma_{in}|$, $|\Gamma_{out}|$, $|\Gamma|=1$

- $|\Gamma| = 1 \rightarrow \log_{10}|\Gamma| = 0$, intersectia = cerc

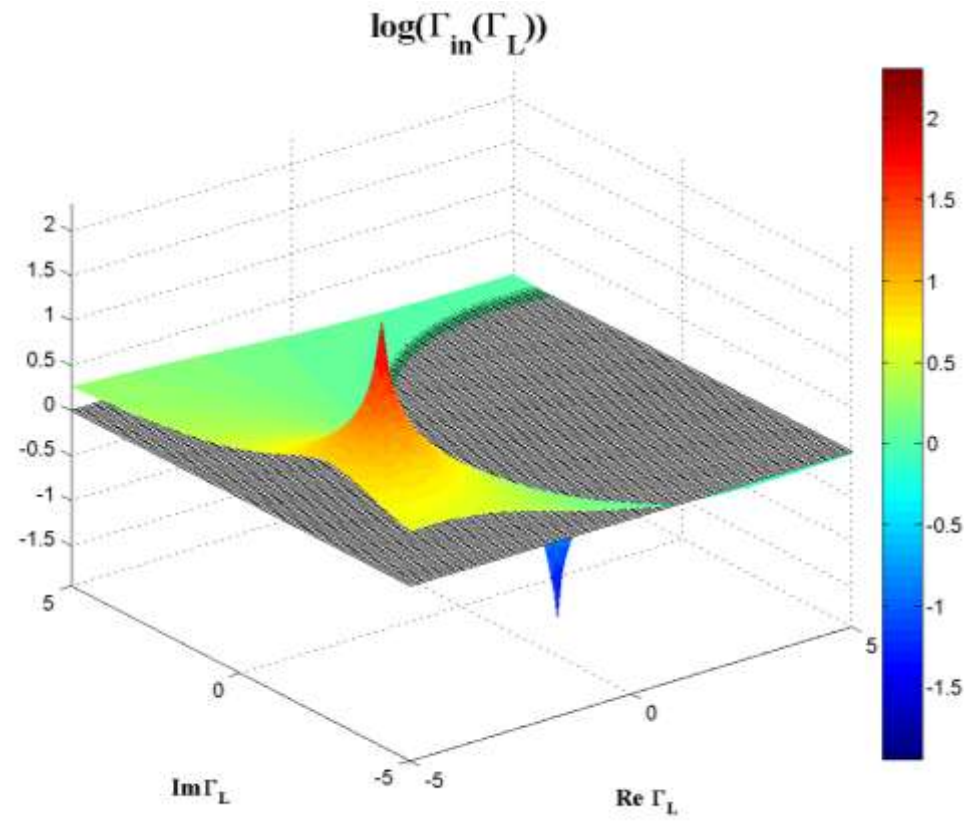

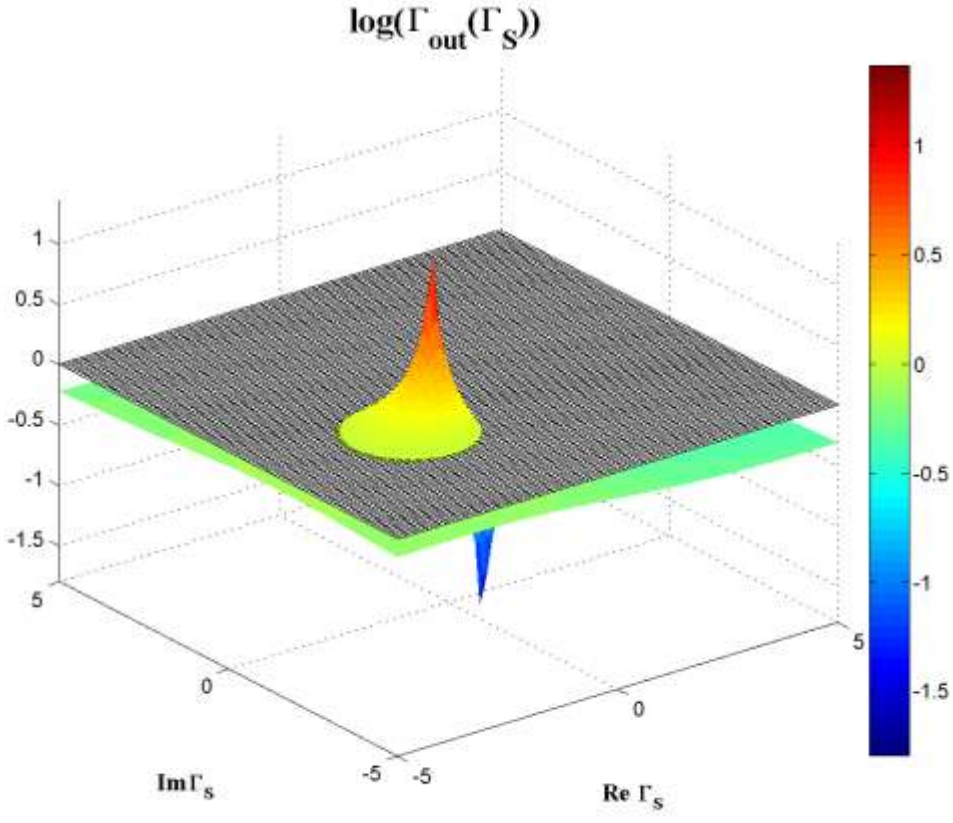

Reprezentare 3D $|\Gamma_{in}|$, $|\Gamma_{out}|$

- $\log_{10}|\Gamma_{in}| = 0$, Γ_L, CSOUT

$\log_{10}|\Gamma_{in}| = 0$,
$|\Gamma_{in}| = 1$

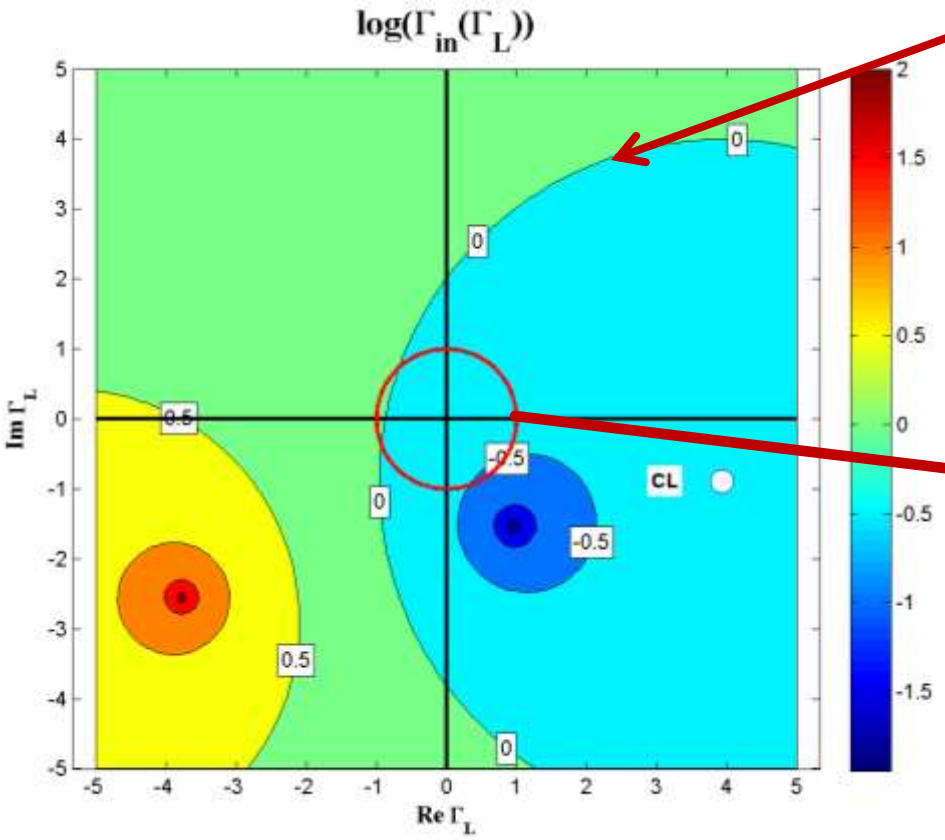

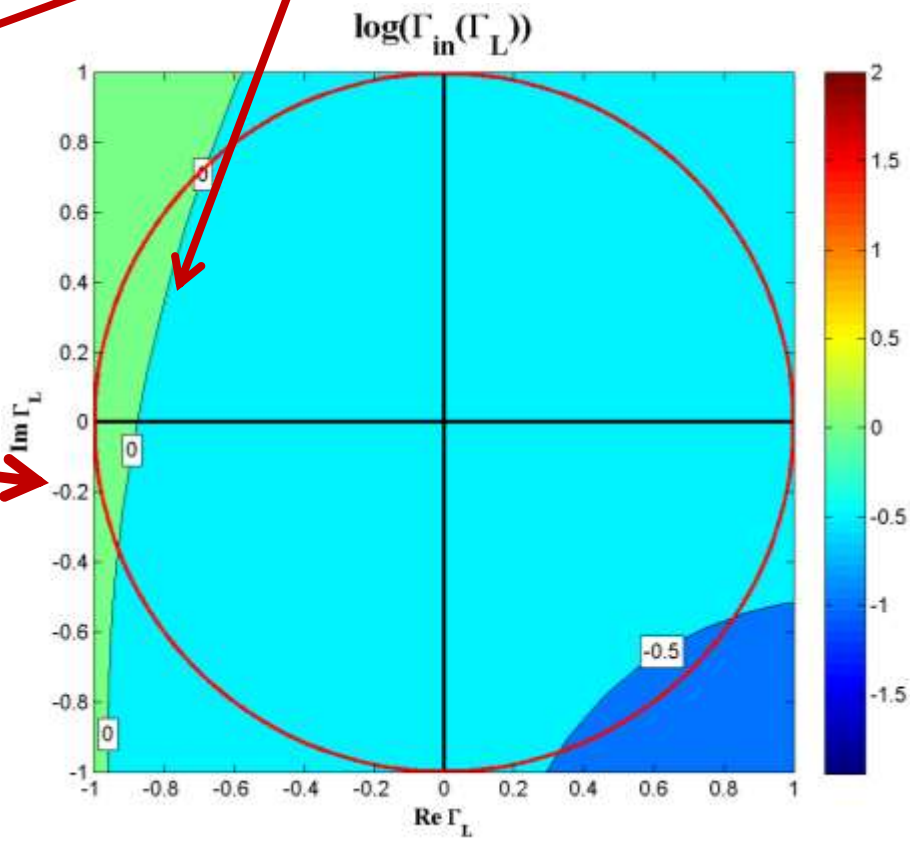

Reprezentare 3D $|\Gamma_{in}|$, $|\Gamma_{out}|$

- $\log_{10}|\Gamma_{out}| = 0$, Γ_S, CSIN

$\log_{10}|\Gamma_{out}| = 0$,
$|\Gamma_{out}| = 1$

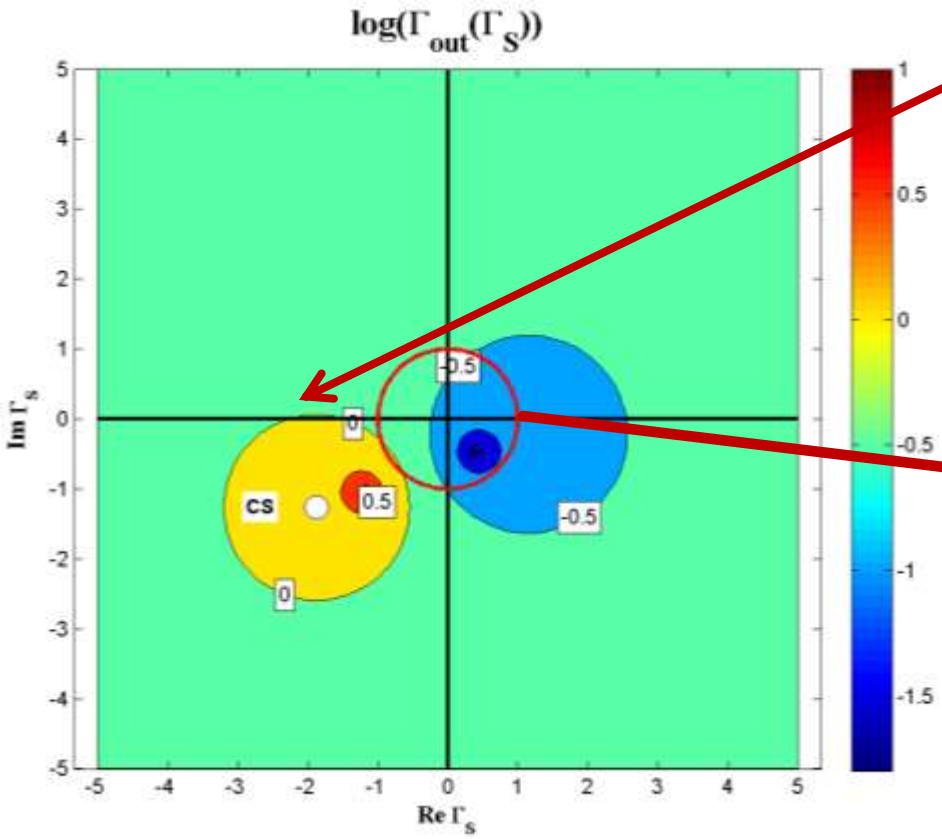

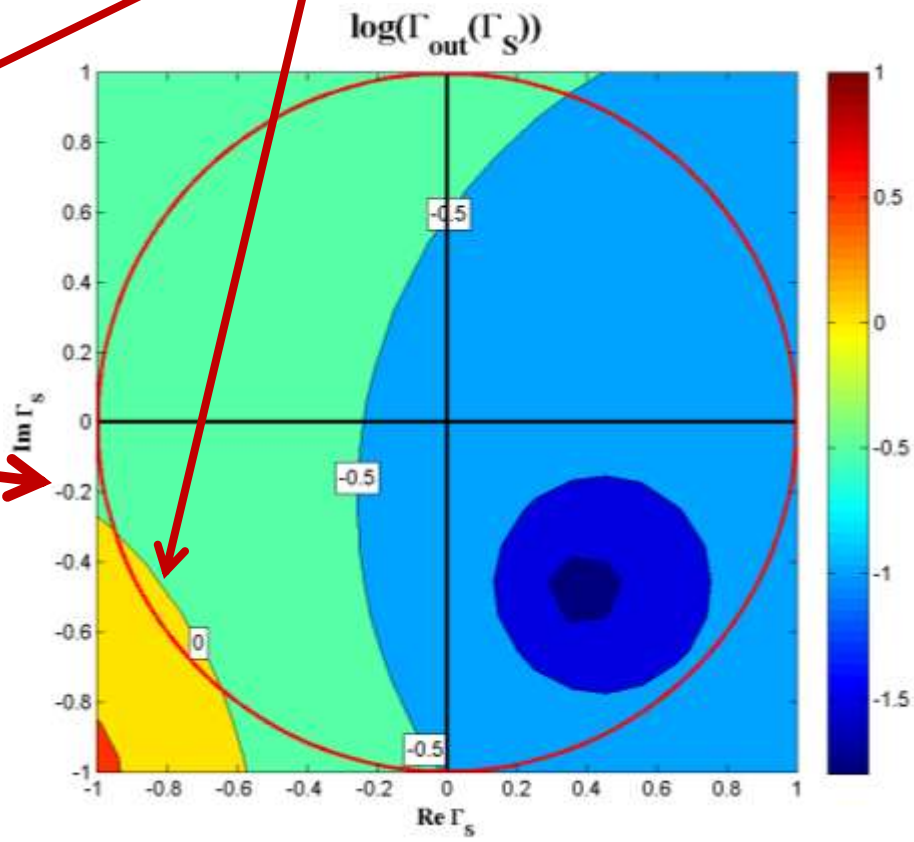

CSIN, CSOUT

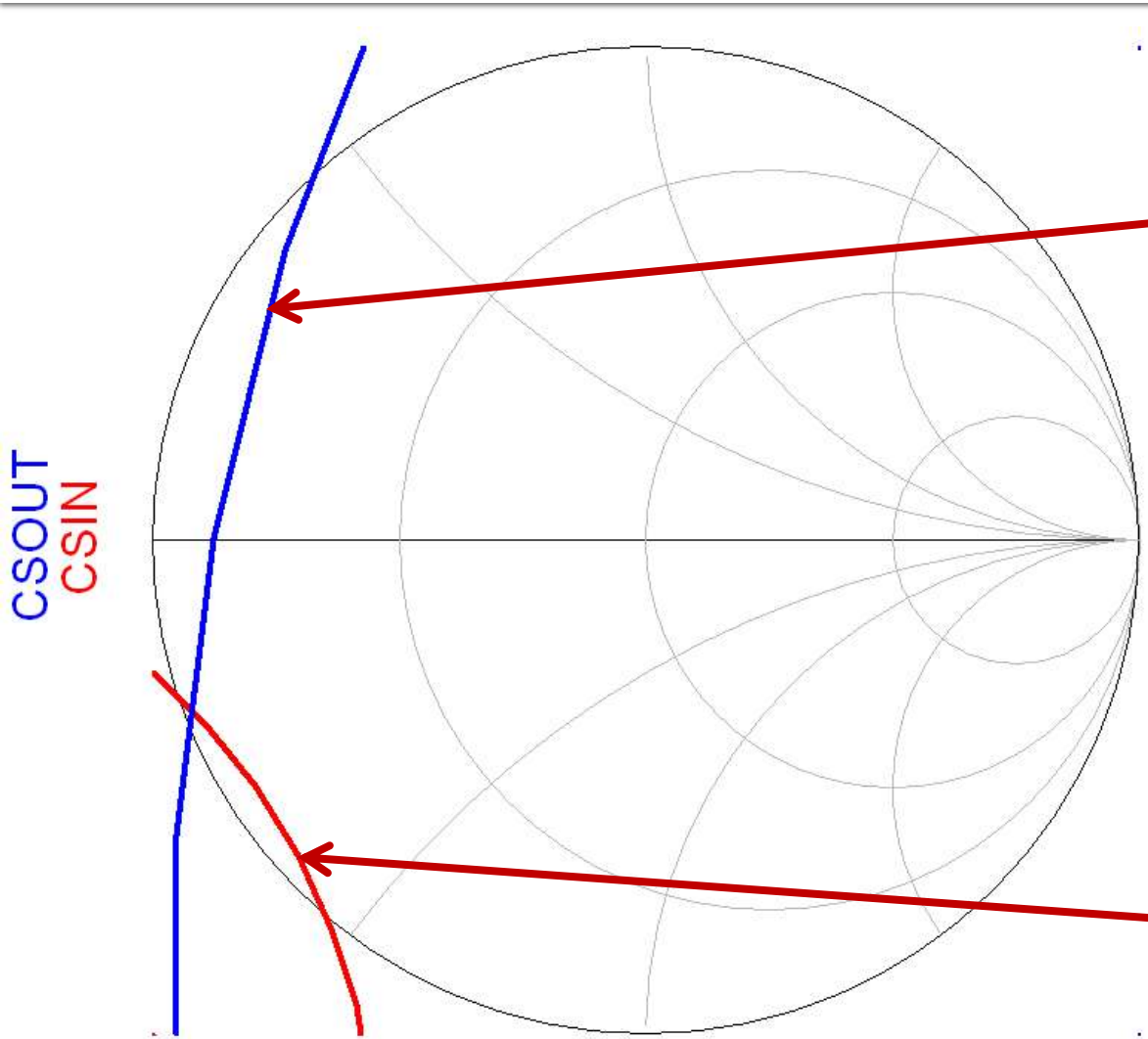

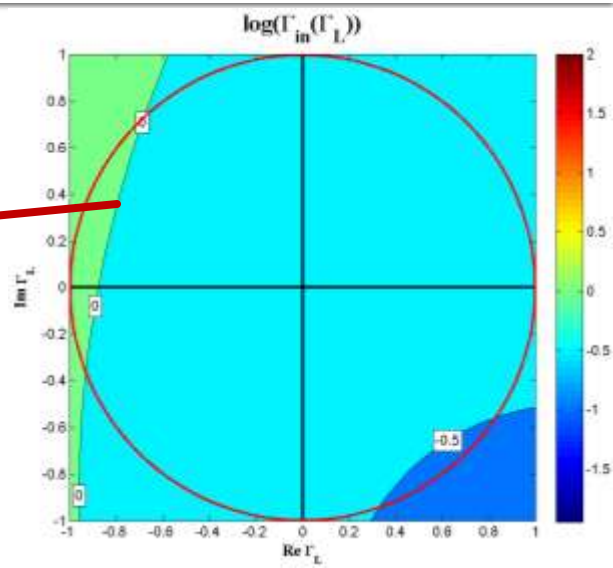

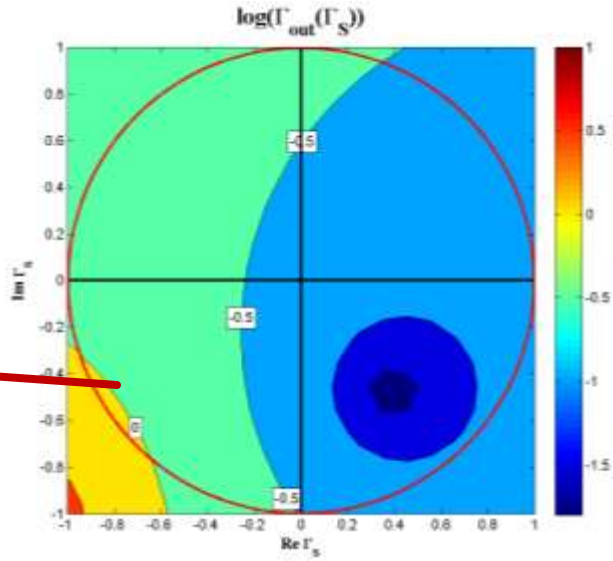

Mai multe pozitionari posibile

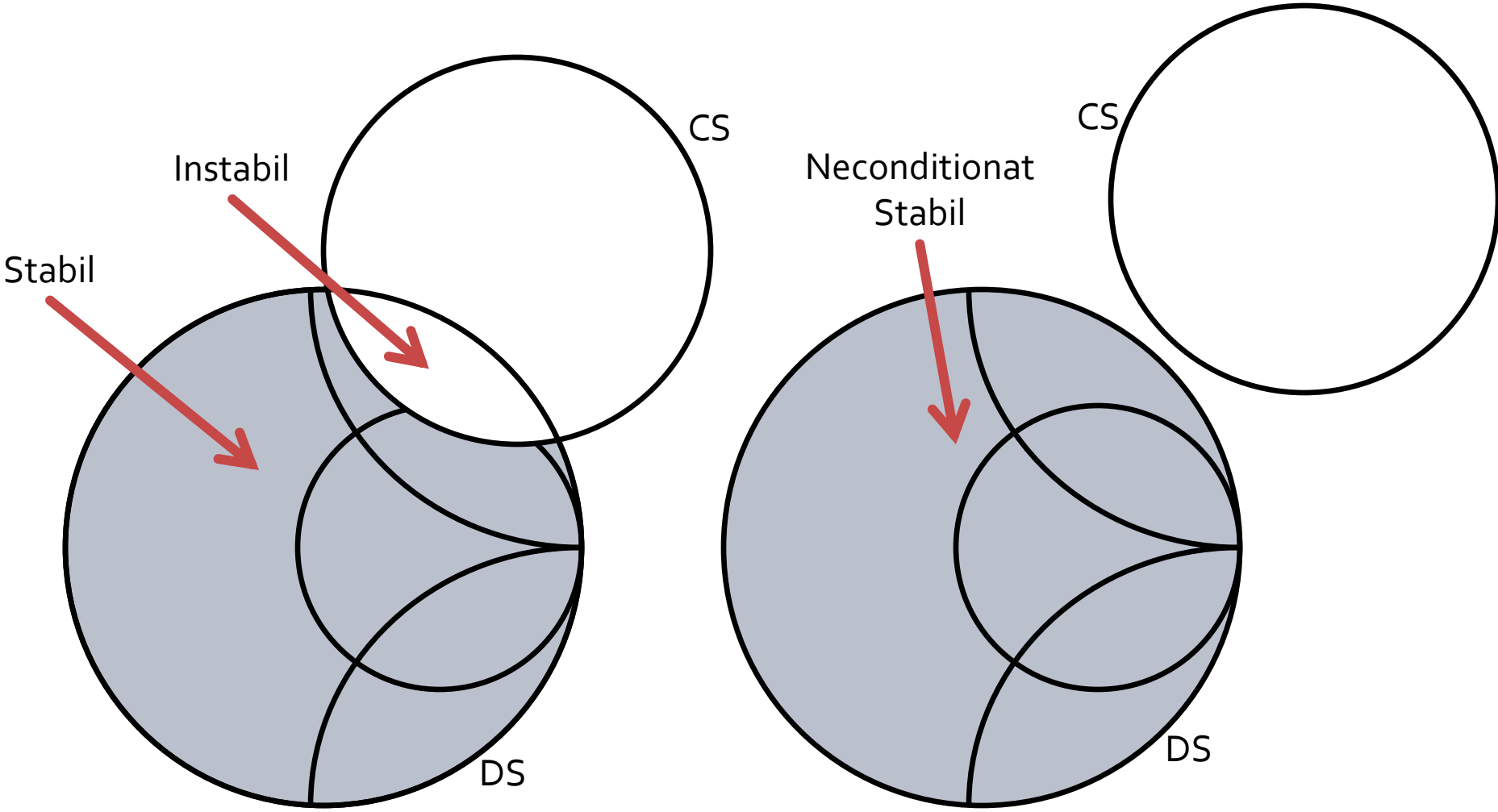

Mai multe pozitionari posibile

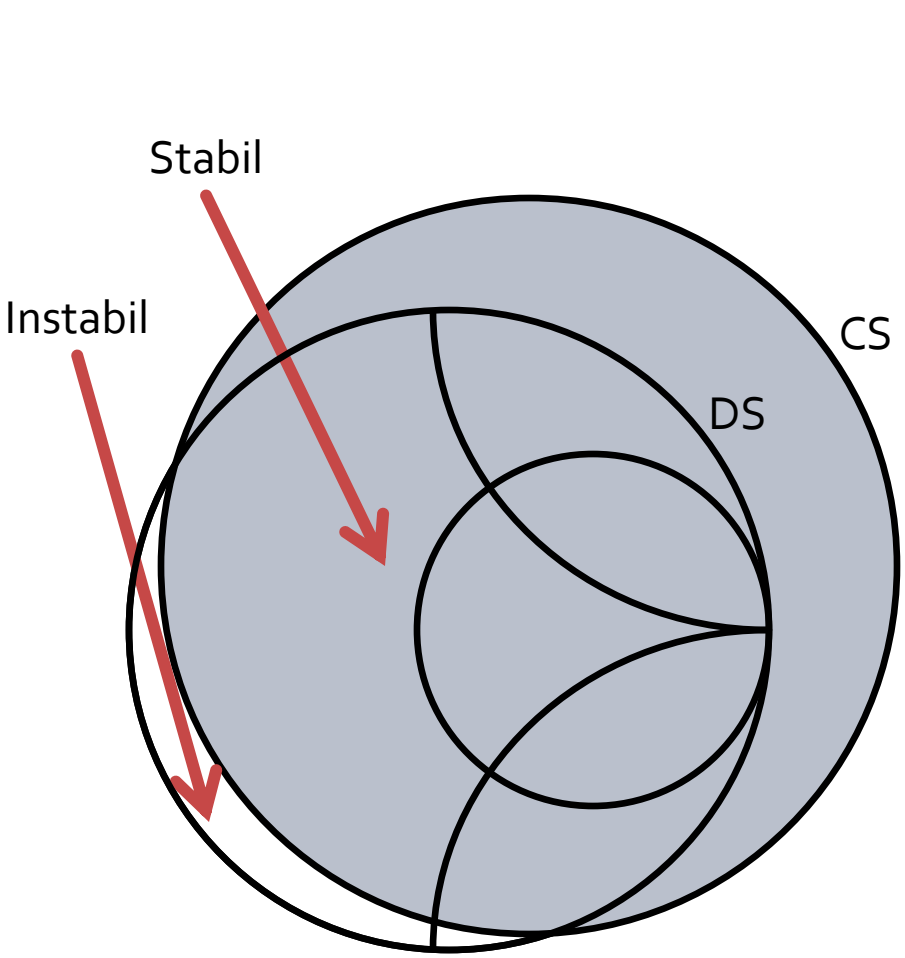

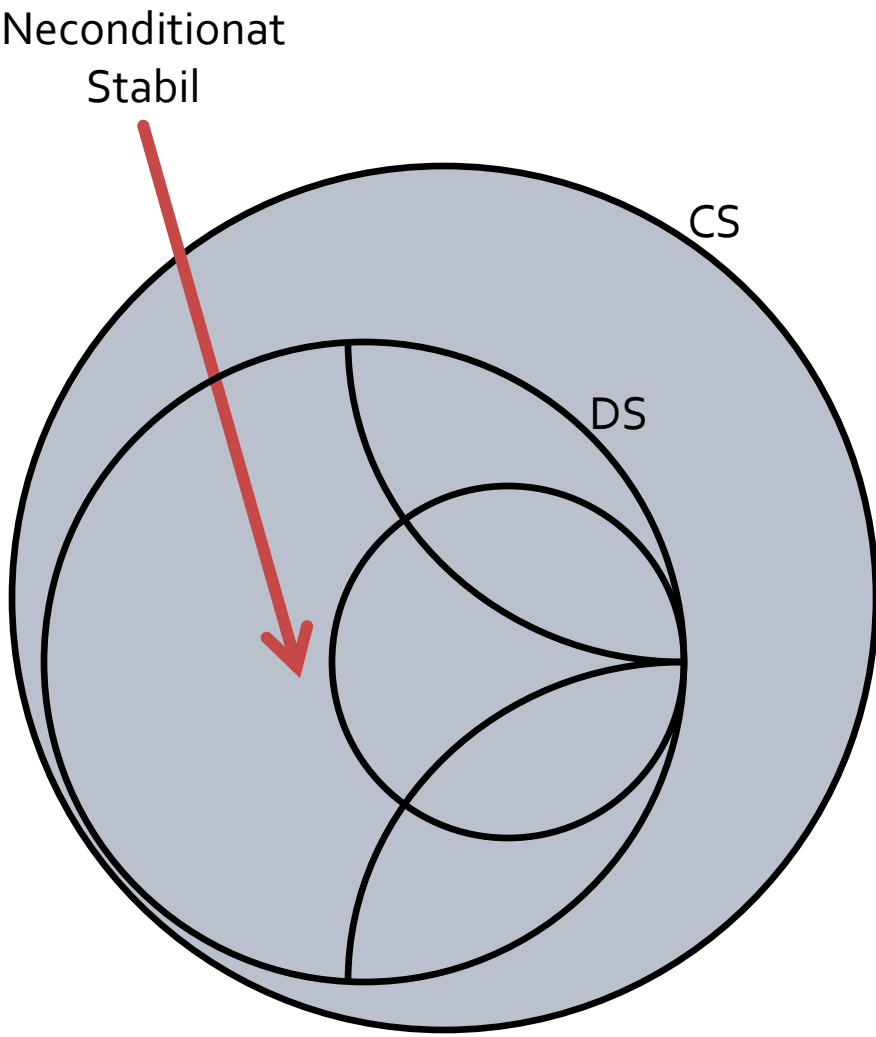

Pozitionari mai rare

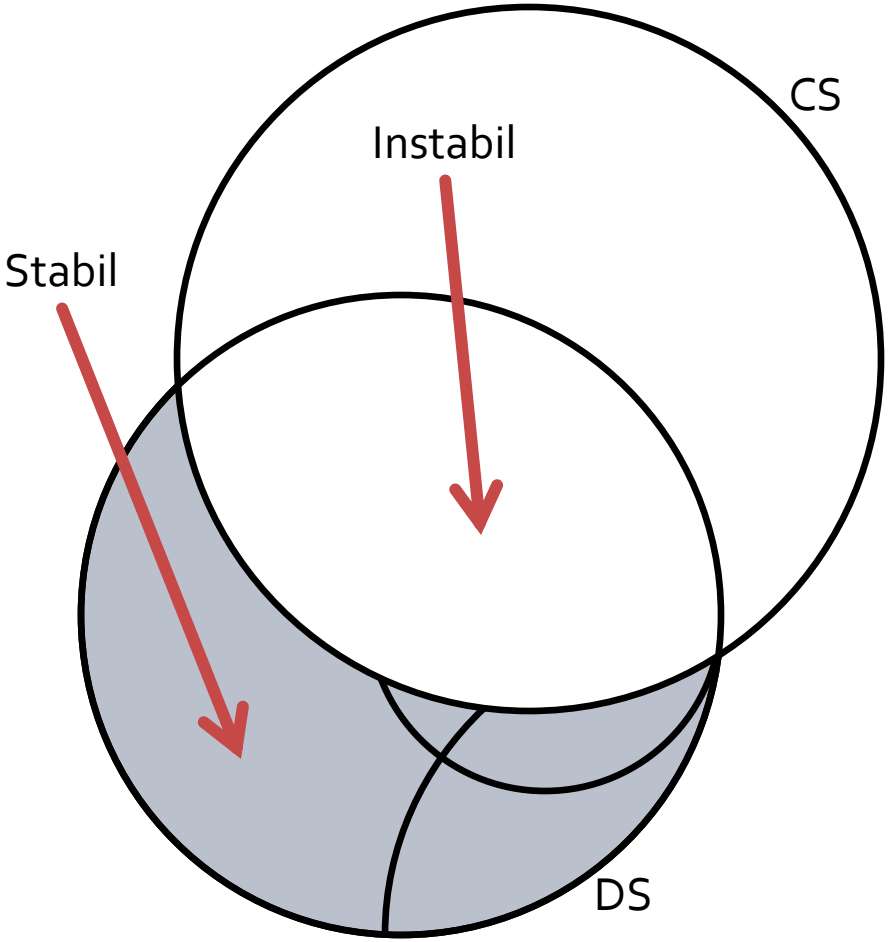

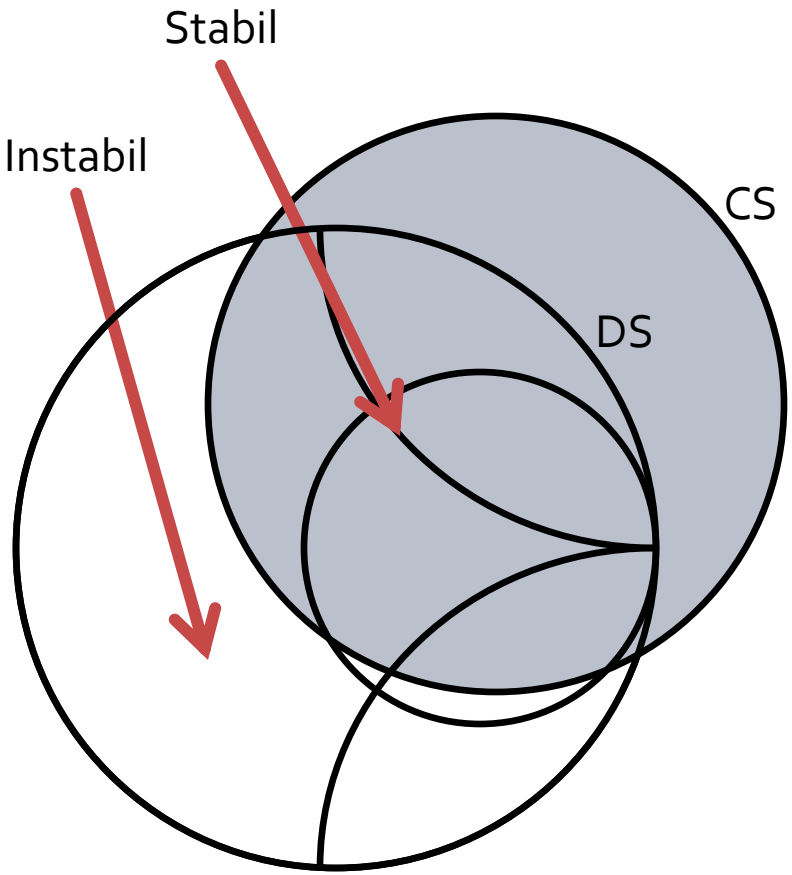

Stabilitate

- **Stabilitatea necondiționată:** circuitul este necondiționat stabil dacă $|\Gamma_{in}|<1$ şi $|\Gamma_{out}|<1$ pentru **orice** impedanță pasivă a sarcinii şi sursei
- **Stabilitatea condiționată:** circuitul este condiționat stabil dacă $|\Gamma_{in}|<1$ şi $|\Gamma_{out}|<1$ doar pentru un anumit interval de valori pentru impedanța pasivă a sarcinii şi sursei

Stabilitate neconditionata

- Stabilitatea neconditionata se obtine daca:
  - Cercul de stabilitate este disjunct cu diagrama Smith (exterior) si zona stabila e exteriorul cercului
  - Cercul de stabilitate contine in intregime diagrama Smith si zona stabila e interiorul cercului
- O conditie obligatorie pentru obtinerea stabilitatii neconditionate este |S11| < 1 (CSOUT) sau |S22| < 1 (CSIN)
- Matematic:

$$\begin{cases} \left||C_L|-R_L\right|>1 \\ |S_{11}|<1 \end{cases} \qquad \begin{cases} \left||C_S|-R_S\right|>1 \\ |S_{22}|<1 \end{cases}$$

Preview (pentru laborator 3-4)

Amplificatoare de microunde

Proiectare pentru castig impus

- Deseori este necesara o alta abordare decat "forta bruta" si se prefera obtinerea unui **castig mai mic** decat cel maxim posibil pentru:
  - conditii de zgomot avantajoase (L3)
  - conditii de stabilitate mai bune
  - obtinerea unui VSWR mai mic
  - controlul performantelor la mai multe frecvente
  - banda de functionare a amplificatorului

Amplificator de banda larga

- Adaptarea pentru castig maxim la doua frecvente genereaza o comportare dezechilibrata

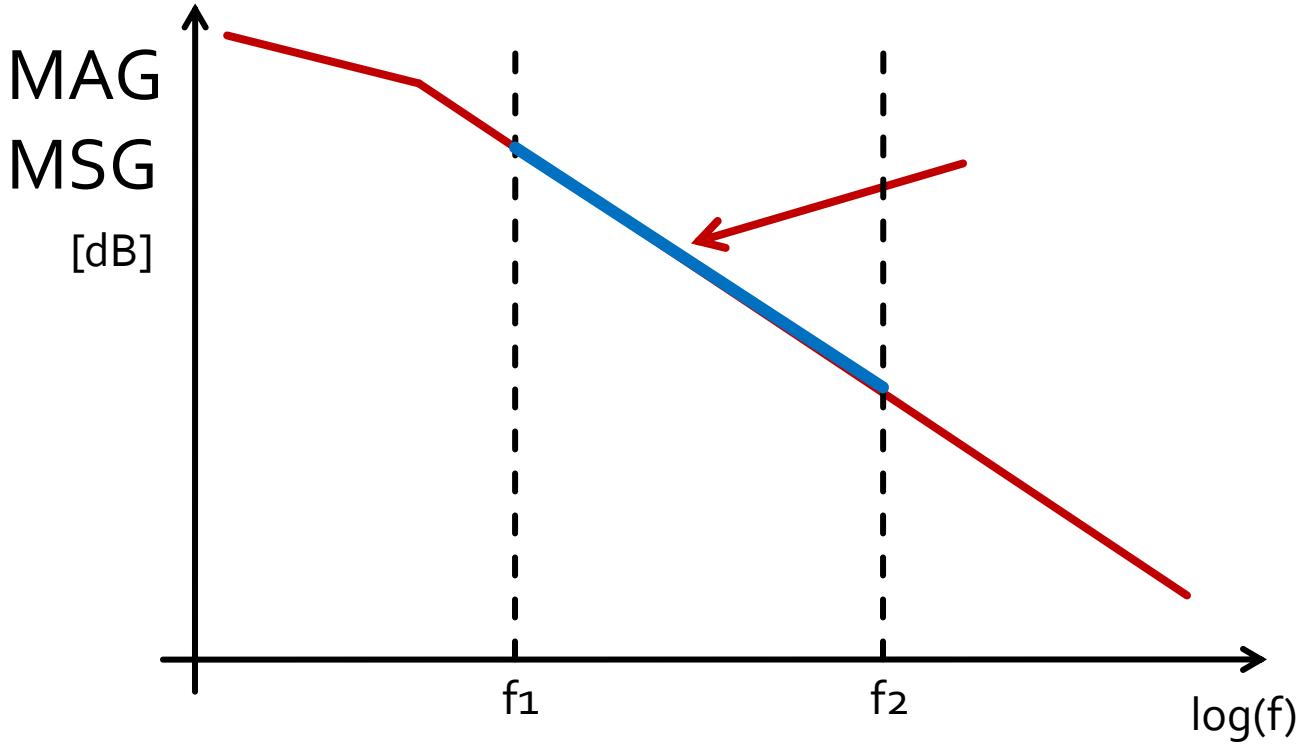

Amplificator de banda larga

- Adaptare pentru castig maxim la frecventa maxima
- Dezadaptare controlata la frecventa minima
  - eventual la mai multe frecvente din banda

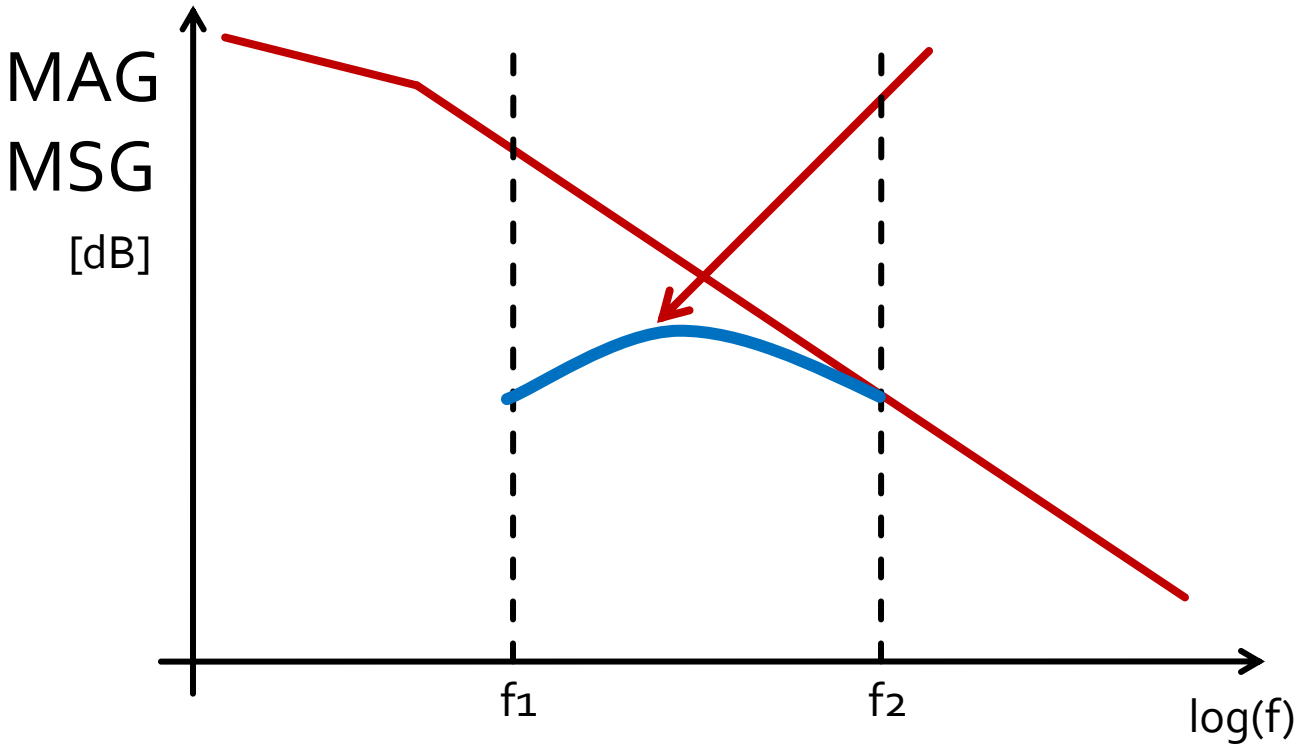

Proiectare pentru castig impus

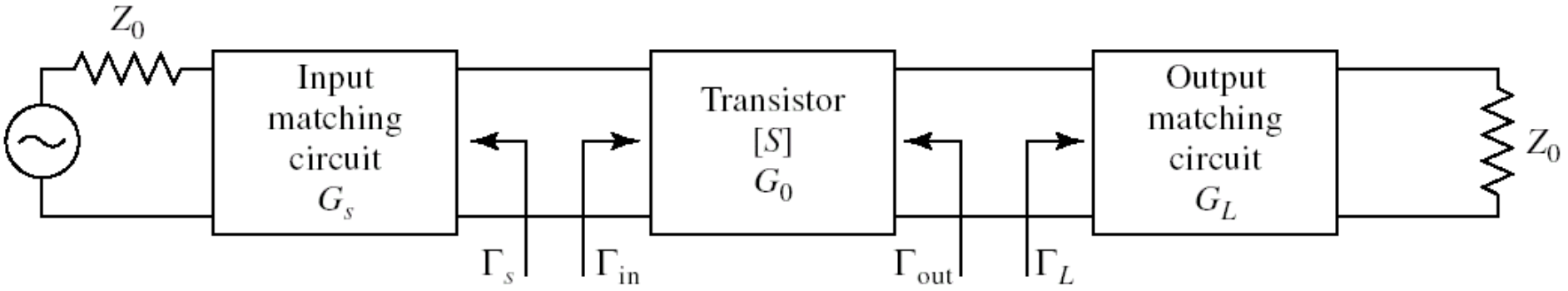

- Daca ipoteza tranzistorului unilateral este justificata:

$$G_{TU} = |S_{21}|^2 \cdot \frac{1-|\Gamma_S|^2}{|1-S_{11}\cdot\Gamma_S|^2} \cdot \frac{1-|\Gamma_L|^2}{|1-S_{22}\cdot\Gamma_L|^2}$$

$$G_S = \frac{1-|\Gamma_S|^2}{|1-S_{11}\cdot\Gamma_S|^2} \qquad G_0 = |S_{21}|^2 \qquad G_L = \frac{1-|\Gamma_L|^2}{|1-S_{22}\cdot\Gamma_L|^2}$$

Proiectare pentru castig impus

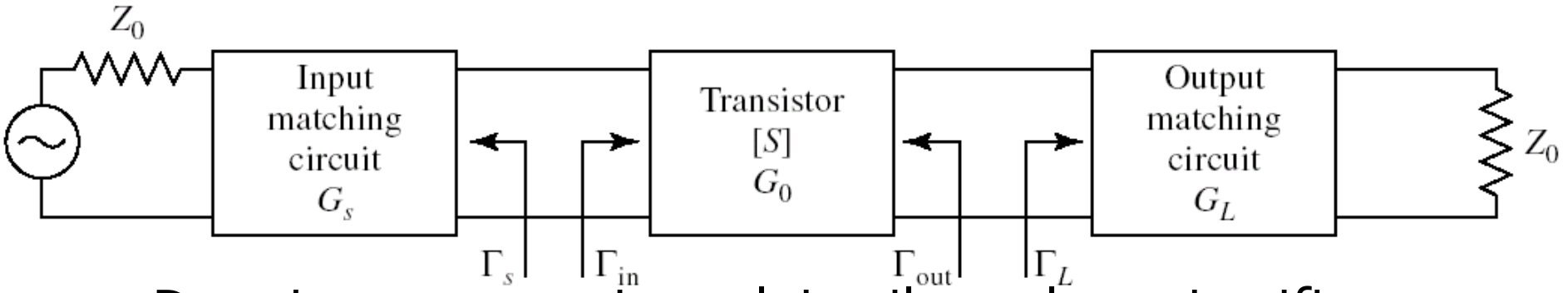

- Daca ipoteza tranzistorului unilateral este justificata:
  - castigul adaugat prin adaptare mai buna la intrare **nu** depinde de adaptarea la iesire
  - castigul adaugat prin adaptare mai buna la iesire **nu** depinde de adaptarea la intrare
- Adaptarile la intrare/iesire pot fi tratate independent
  - Se pot impune cerinte diferite intrare/iesire
  - se tine cont de compunerea castigurilor generate

$$G_T = G_S \cdot G_0 \cdot G_L \qquad G_T[dB] = G_S[dB] + G_0[dB] + G_L[dB]$$

$G_S(\Gamma_S)$

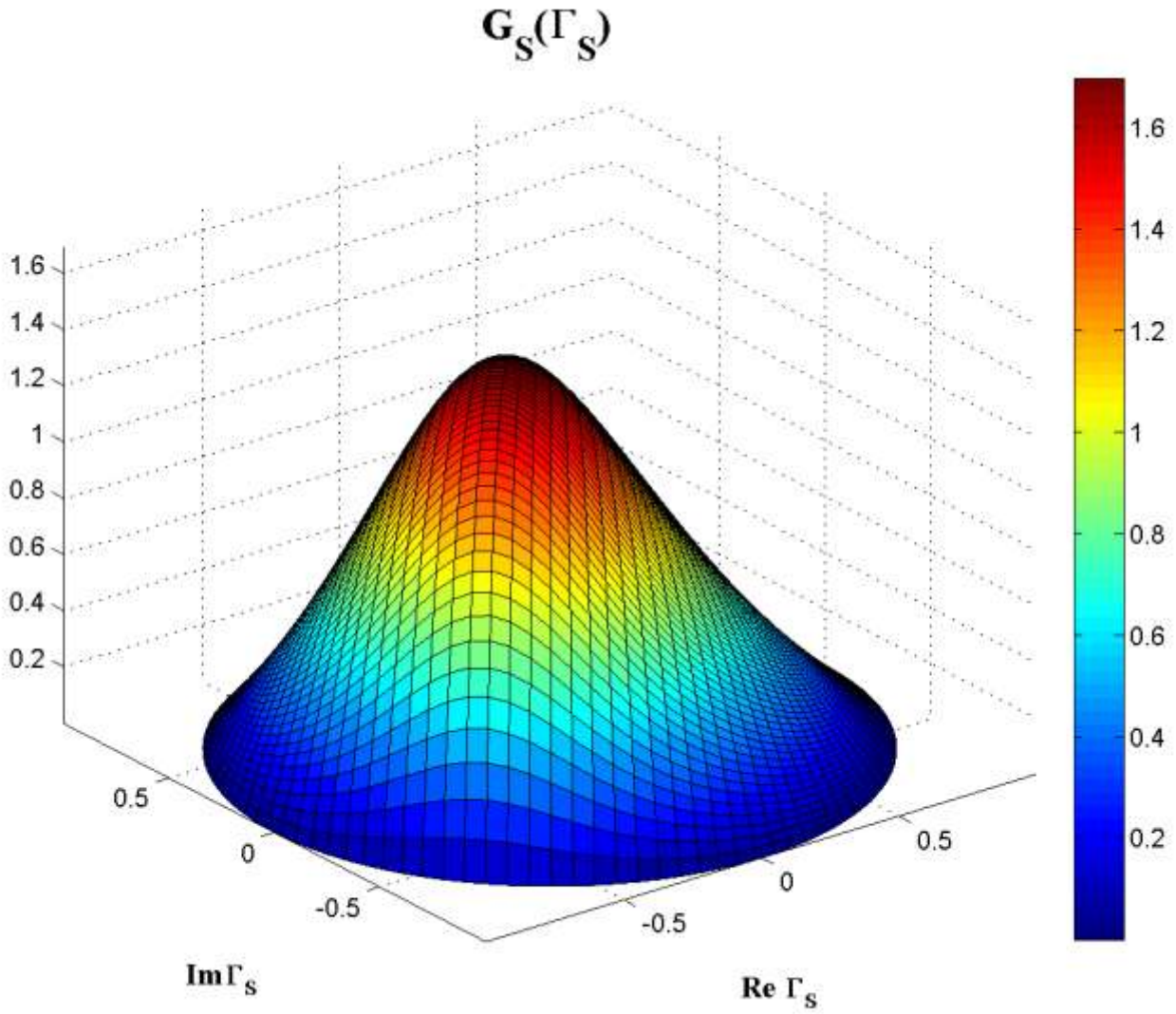

$$G_S = \frac{1-|\Gamma_S|^2}{|1-S_{11}\cdot\Gamma_S|^2}$$

$G_S(\Gamma_S)$, nivel constant

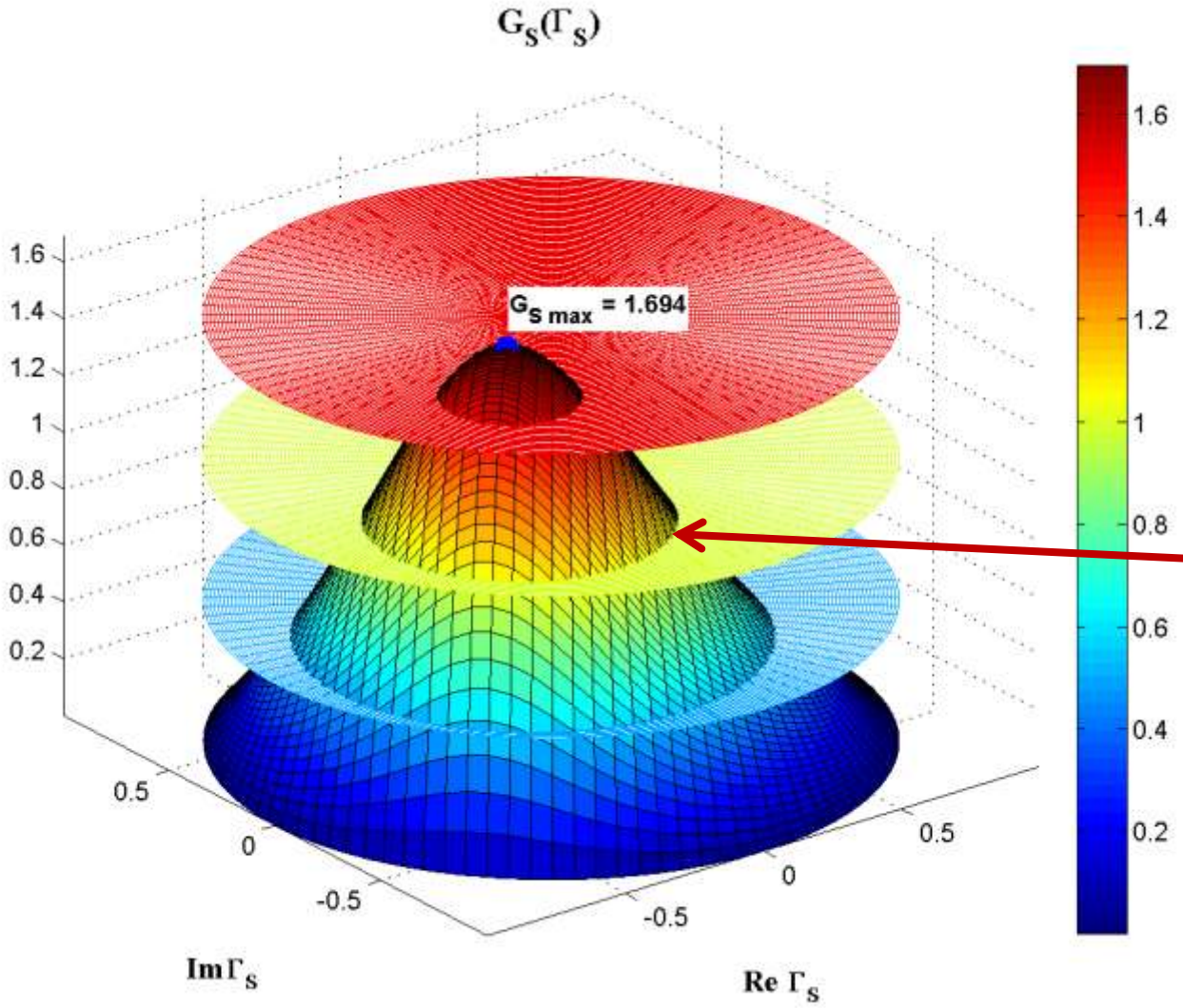

$G_S = 1.5$

$G_S = 1.0$

$G_S = 0.5$

Cercuri

$G_S(\Gamma_S)$, diagrama de nivel

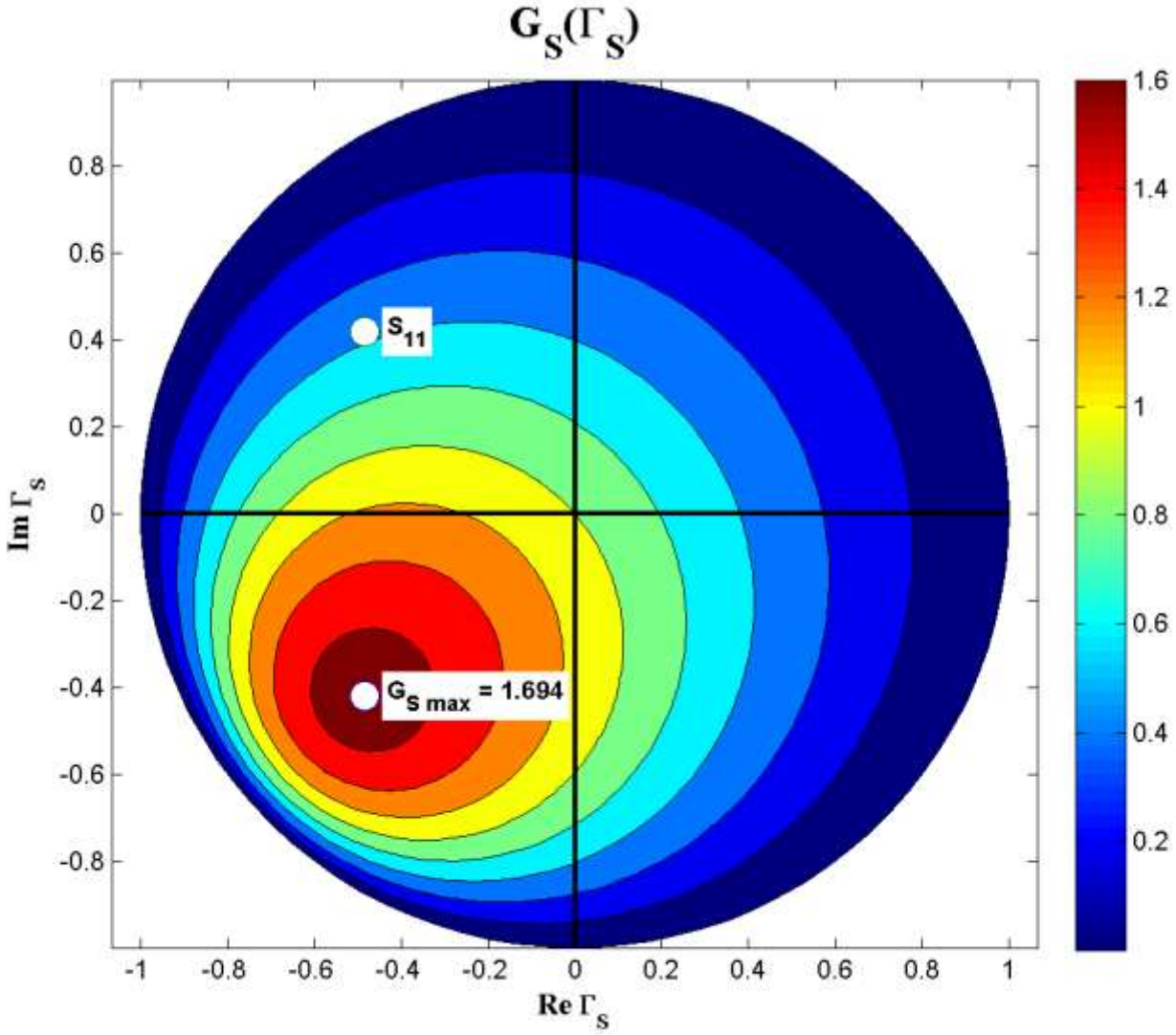

$$G_S = \frac{1-\left|\Gamma_S\right|^2}{\left|1-S_{11}\cdot\Gamma_S\right|^2}$$

$$G_{S\max} = G_S\Big|_{\Gamma_S = S_{11}^*}$$

$G_S[dB](\Gamma_S)$, diagrama de nivel

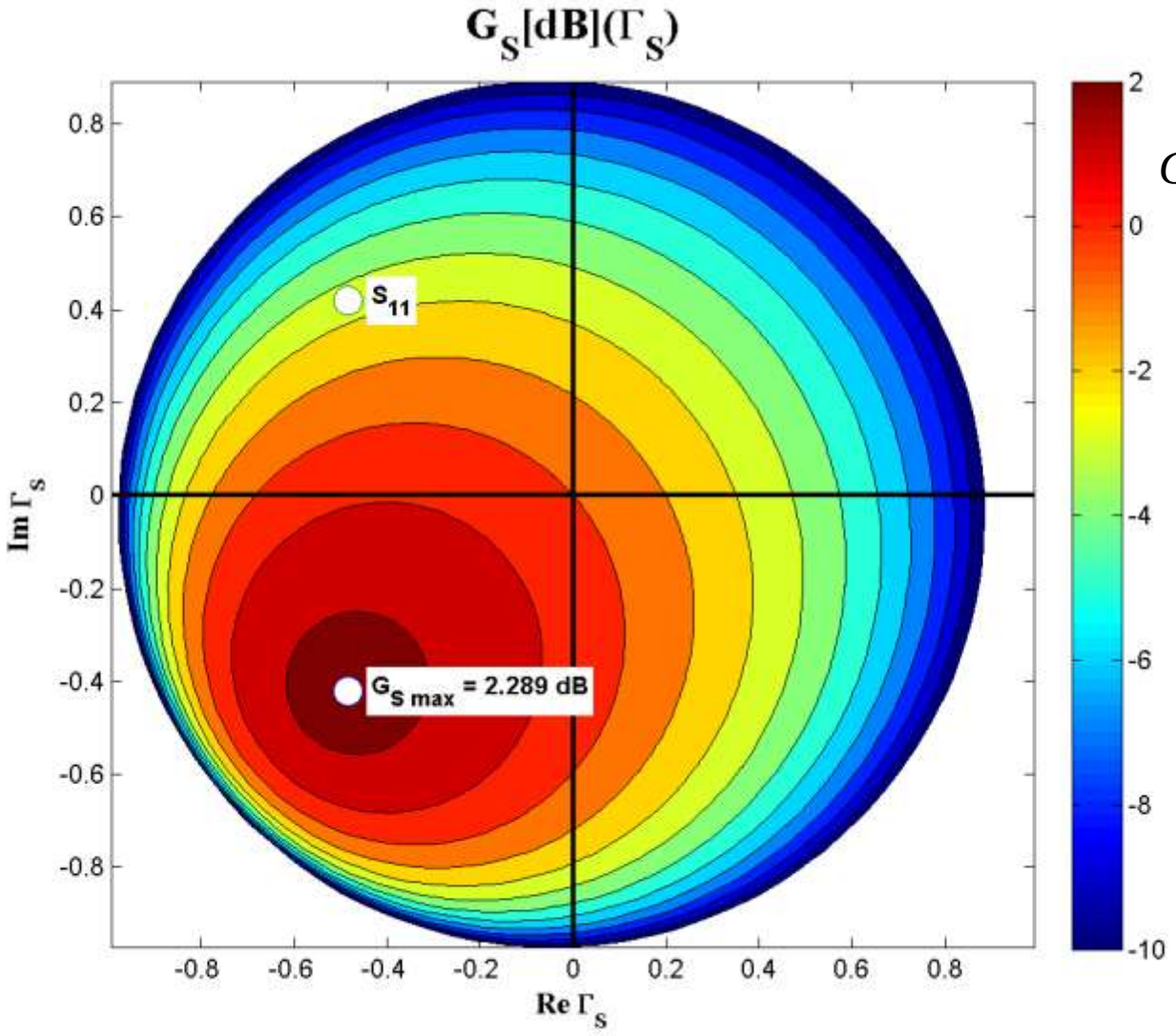

$$G_S[dB] = 10 \cdot \log\left(\frac{1-|\Gamma_S|^2}{|1-S_{11}\cdot\Gamma_S|^2}\right)$$

$$G_{S\max} = G_S\big|_{\Gamma_S = S_{11}^*}$$

Cercuri de castig constant la intrare

$$\left|\Gamma_S - \frac{g_S \cdot S_{11}^*}{1-(1-g_S)\cdot|S_{11}|^2}\right| = \frac{\sqrt{1-g_S}\cdot\left(1-|S_{11}|^2\right)}{1-(1-g_S)\cdot|S_{11}|^2} \qquad |\Gamma_S - C_S| = R_S$$

$$C_S = \frac{g_S \cdot S_{11}^*}{1-(1-g_S)\cdot|S_{11}|^2} \qquad R_S = \frac{\sqrt{1-g_S}\cdot\left(1-|S_{11}|^2\right)}{1-(1-g_S)\cdot|S_{11}|^2}$$

- Ecuatia unui cerc in planul complex in care reprezint Γ_S
- **Interpretare**: Orice punct Γ_S care reprezentat in planul complex se gaseste **pe** cercul desenat pentru $g_{cerc} = G_{cerc}/G_{Smax}$ va conduce la obtinerea castigului $G_S = G_{cerc}$
  - Orice punct **in exteriorul** acestui cerc va genera un castig $G_S < G_{cerc}$
  - Orice punct **in interiorul** acestui cerc va genera un castig $G_S > G_{cerc}$
- Discutie similara la iesire **CCCIN, CCCOUT**

CCCIN, CCCOUT

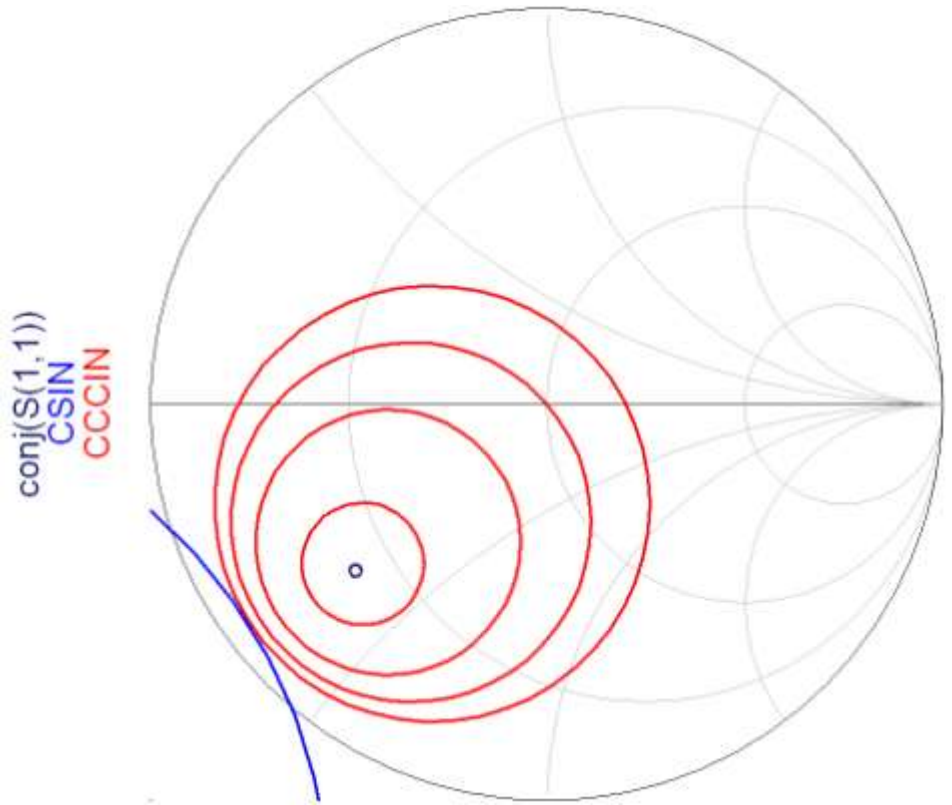

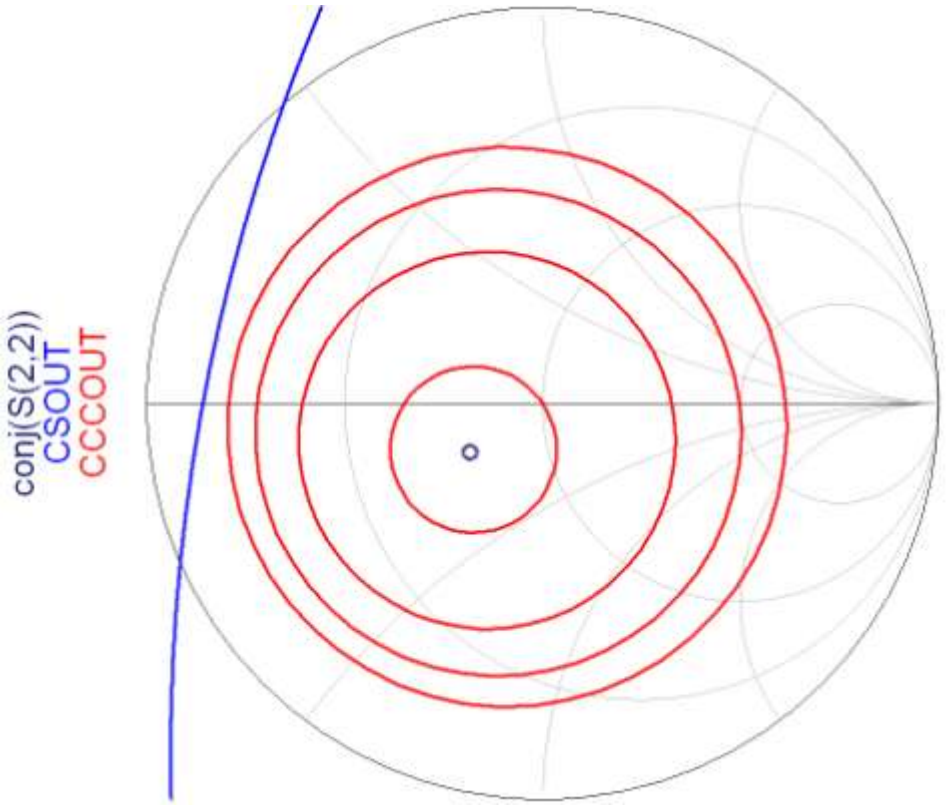

- Cercurile se reprezinta pentru valorile cerute in dB
- Este utila calcularea G_{Smax} si G_{Lmax} anterior

Factor de zgomot

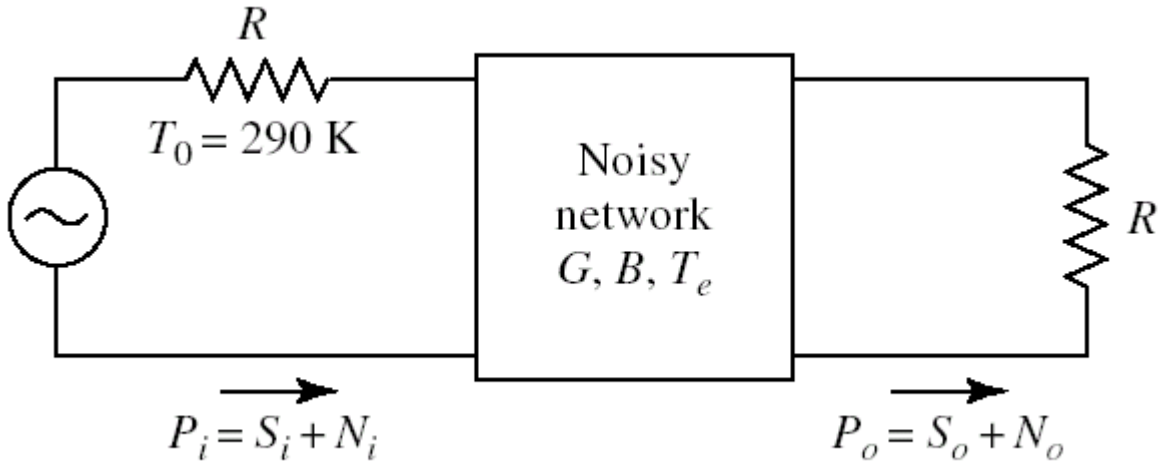

- Factorul de zgomot F caracterizeaza degradarea raportului semnal/zgomot intre intrarea si iesirea unei componente

$$F = \frac{S_i / N_i}{S_o / N_o}$$

$F(\Gamma_s)$

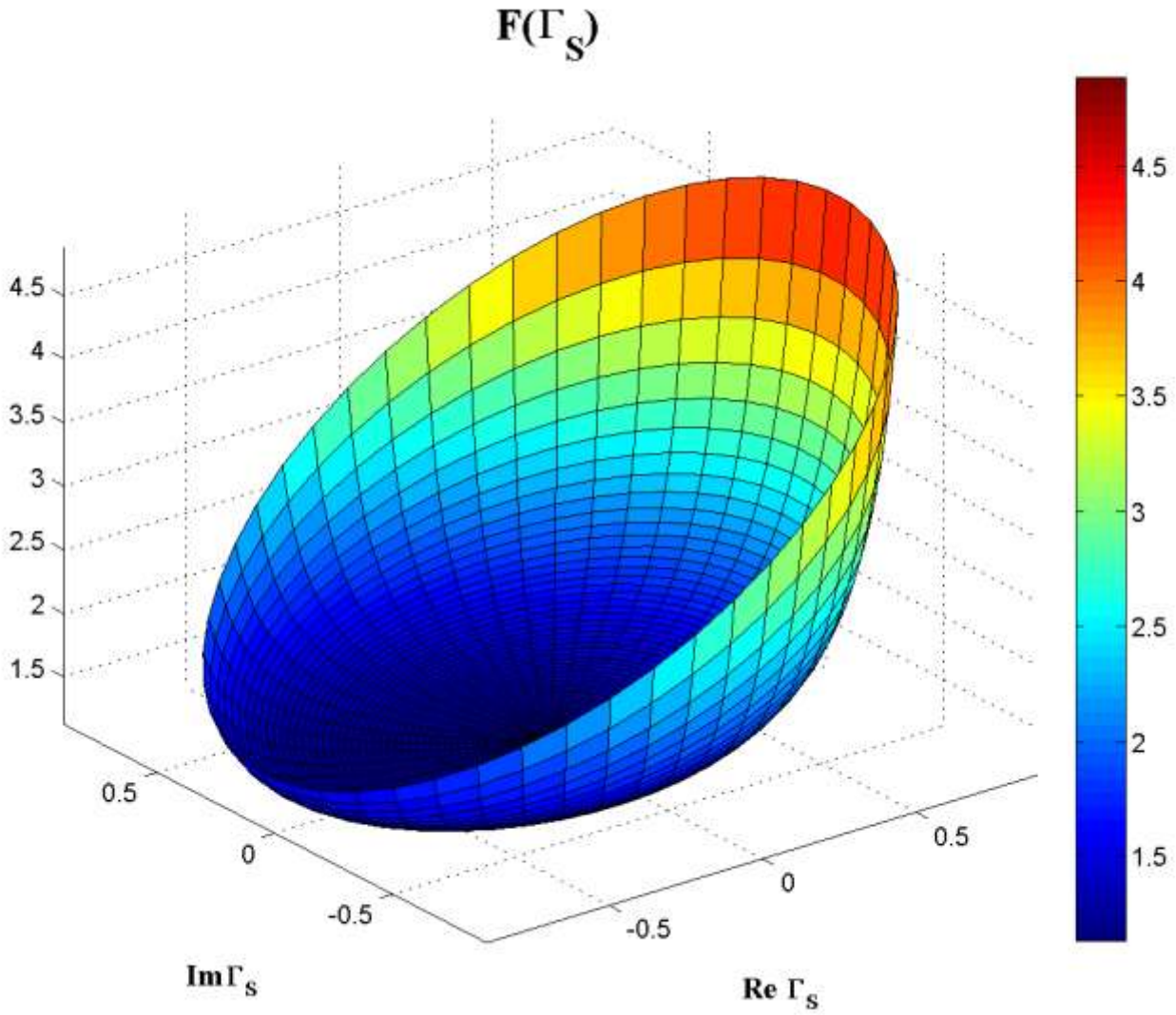

$F[dB](\Gamma_s)$

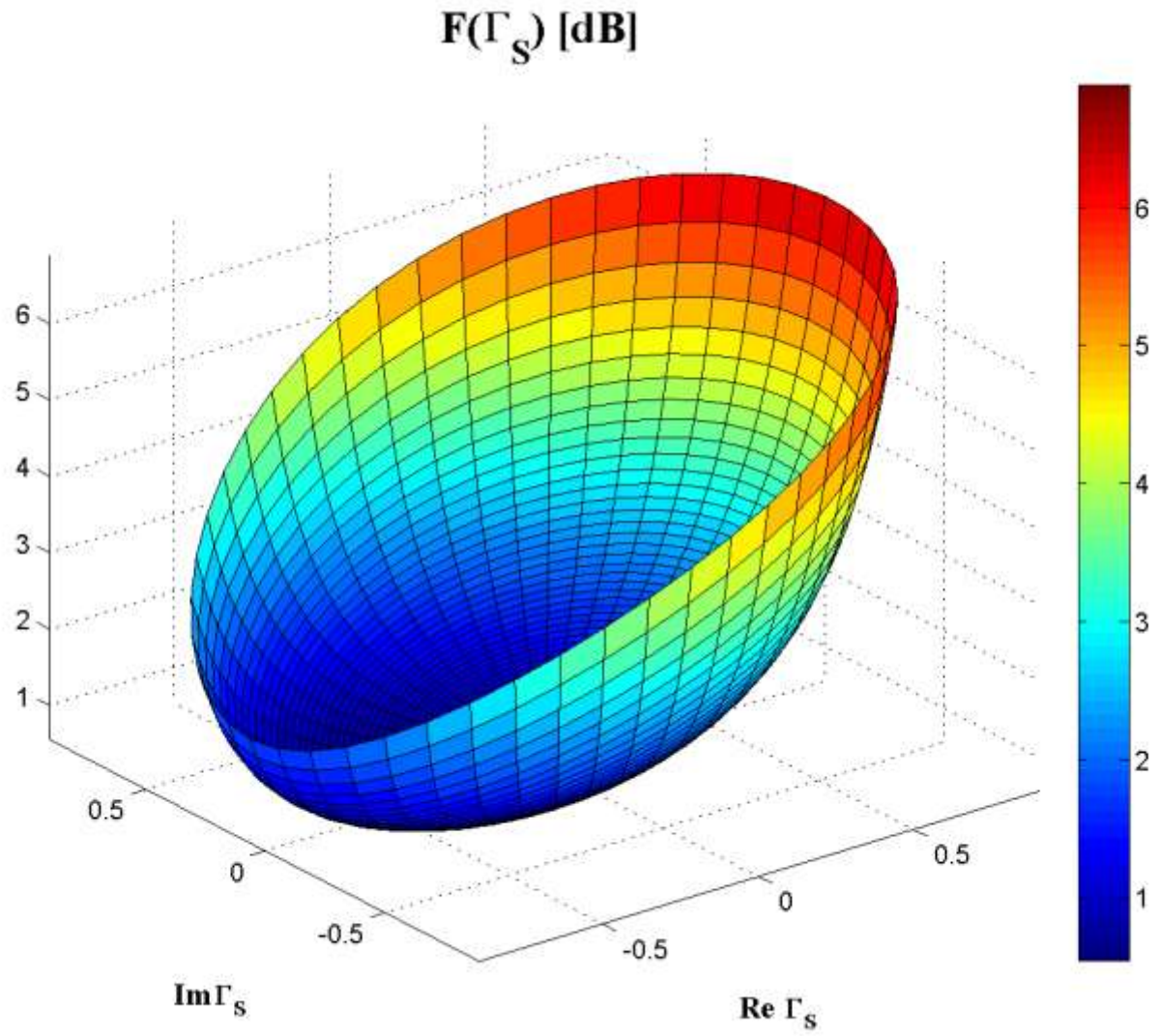

F[dB](Γ_s), diagrama de nivel

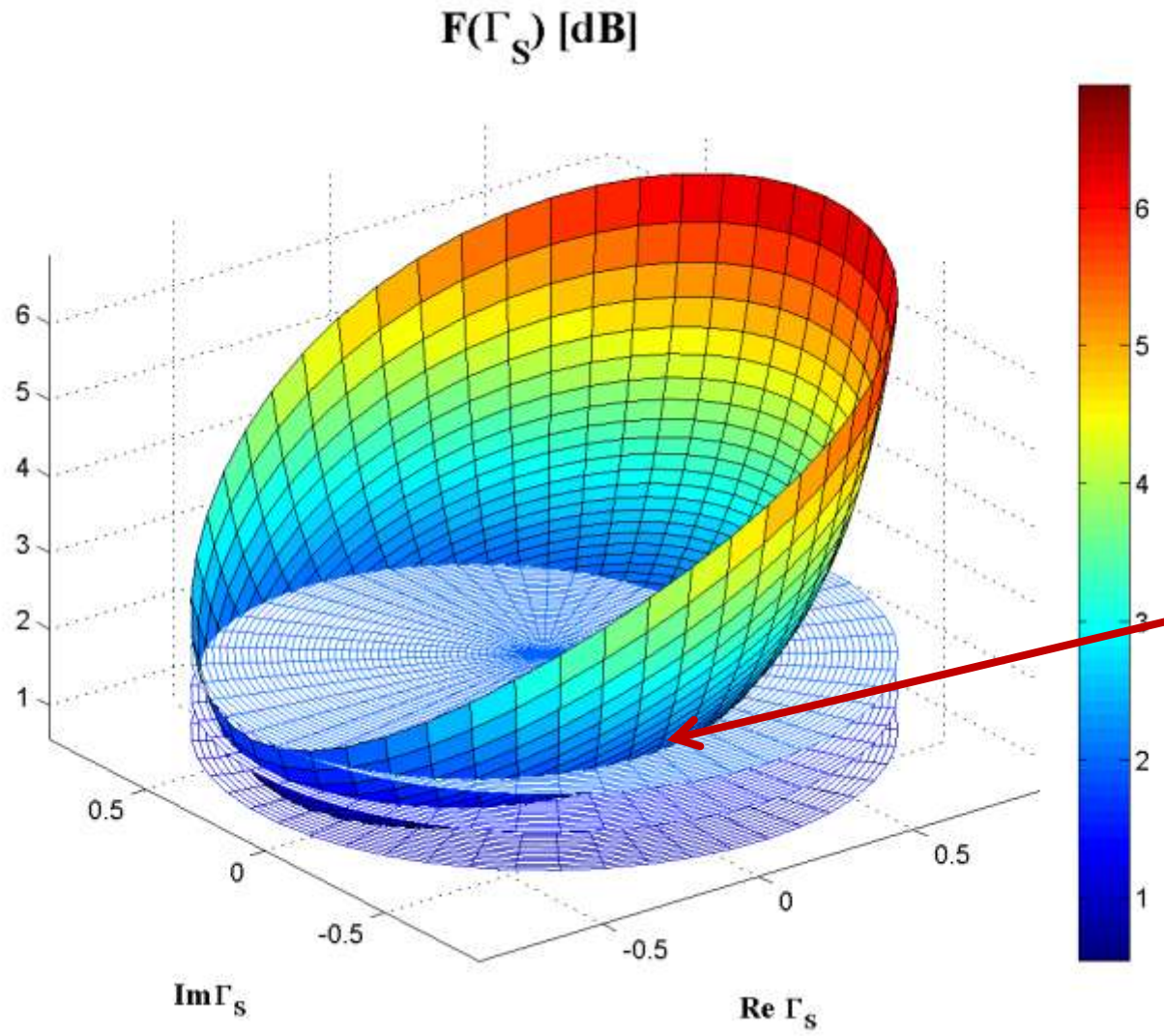

Cercuri

$G_s[dB](\Gamma_s)$, diagrama de nivel

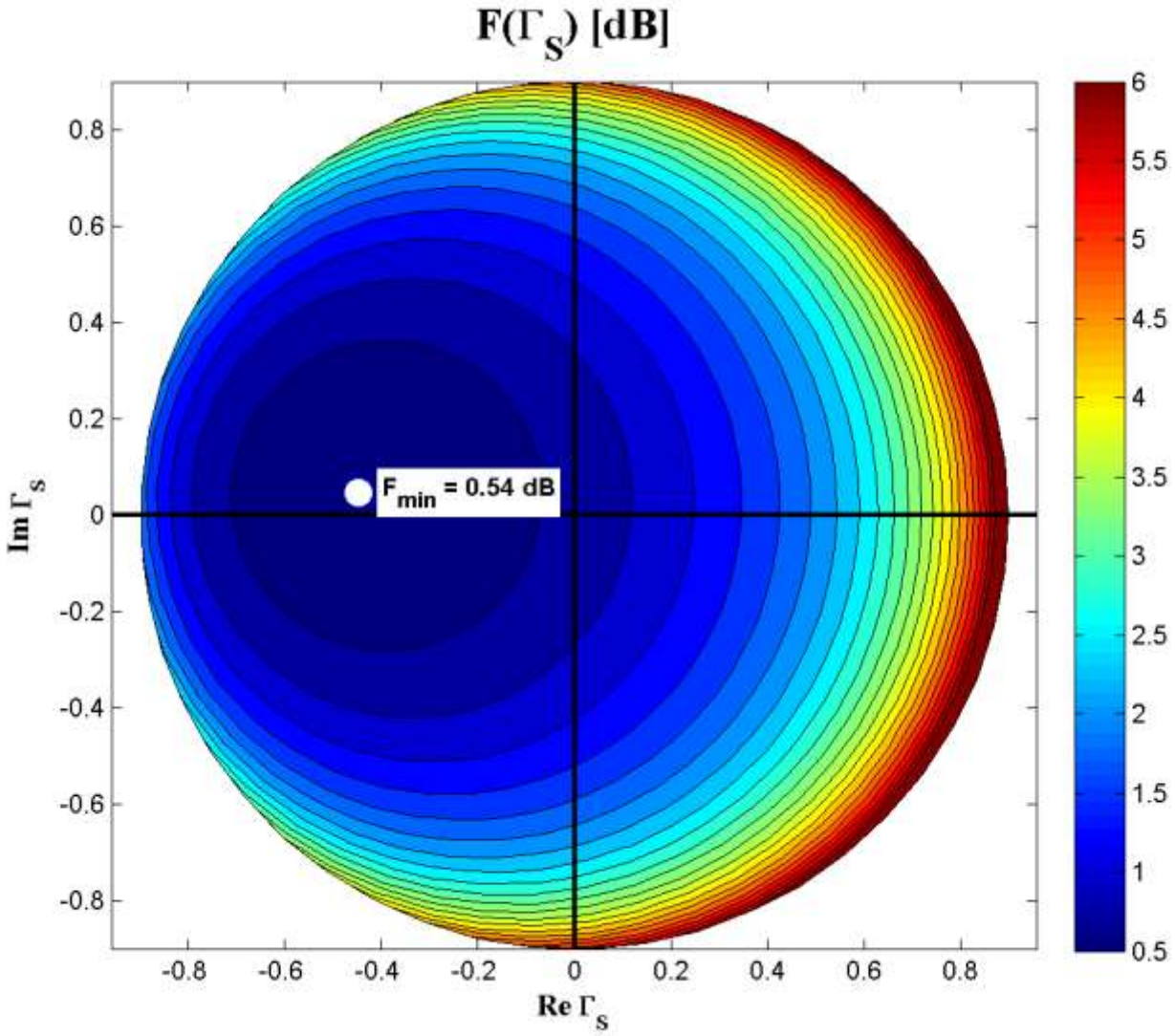

Γopt = 0.45 ∠174°

CZ – numai la intrare !

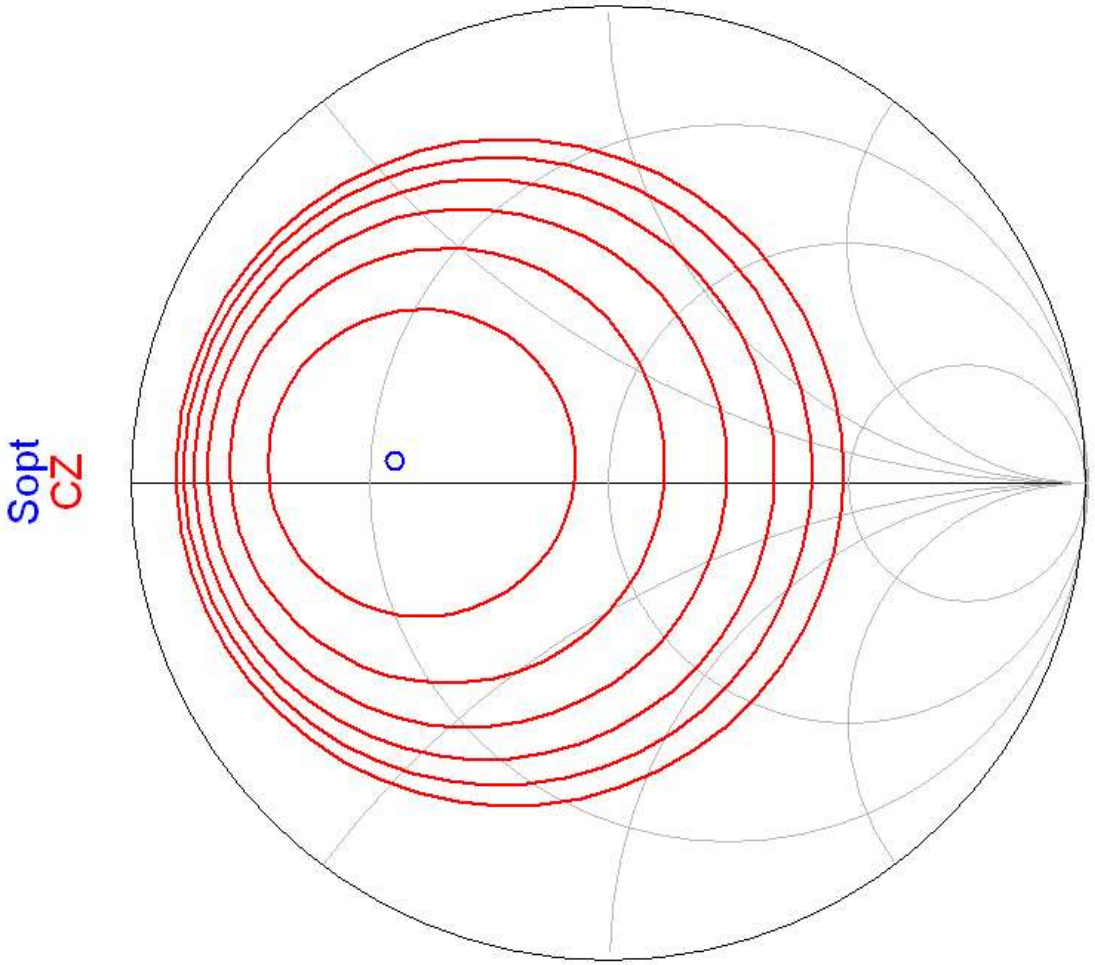

Exemplu, LNA @ 5 GHz

- Amplificator de zgomot redus
- La intrare e necesar un compromis intre
  - zgomot (cerc de zgomot constant ~~la intrare~~)
  - castig (cerc de castig constant la intrare)
  - stabilitate (cerc de stabilitate la intrare)
- La iesire zgomotul **nu intervine** (nu exista influenta). Compromis intre:
  - castig (cerc de castig constant la iesire)
  - stabilitate (cerc de stabilitate la iesire)

Adaptare la intrare

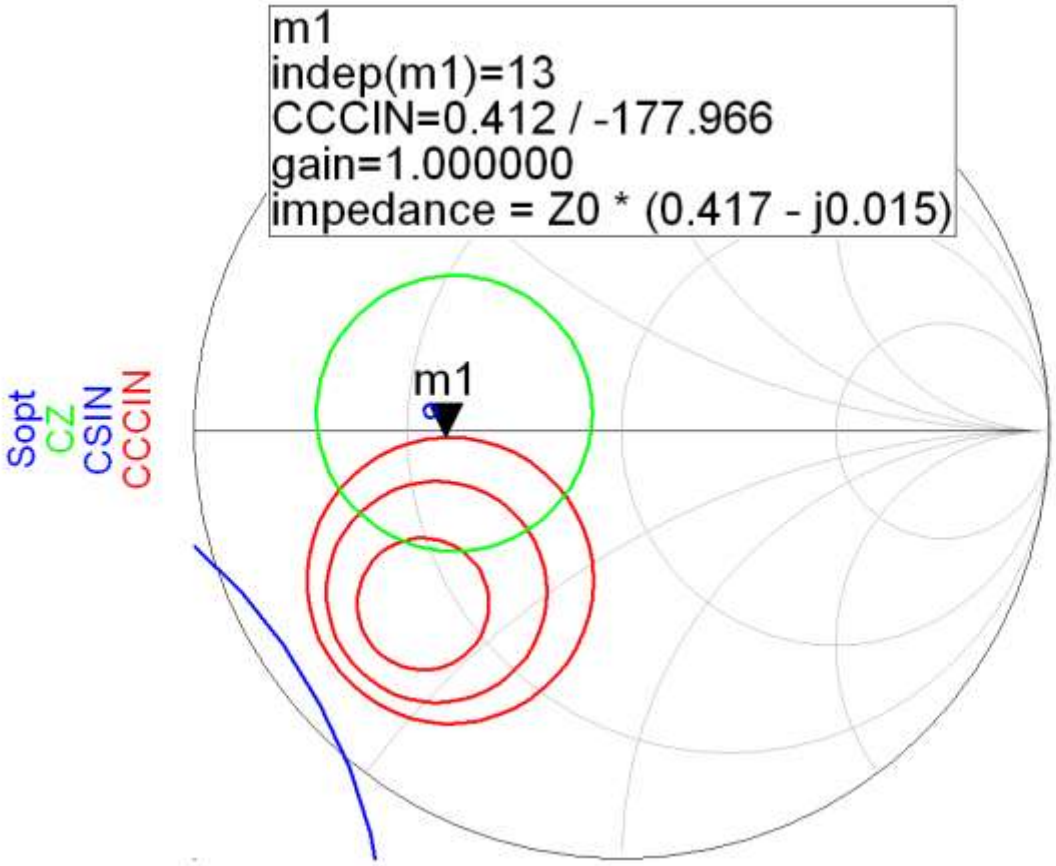

- Daca se sacrifica 1.2dB castig la intrare pentru conditii convenabile F,Q (Gs = 1 dB)
- Se prefera obtinerea unui zgomot mai mic

Adaptare la iesire

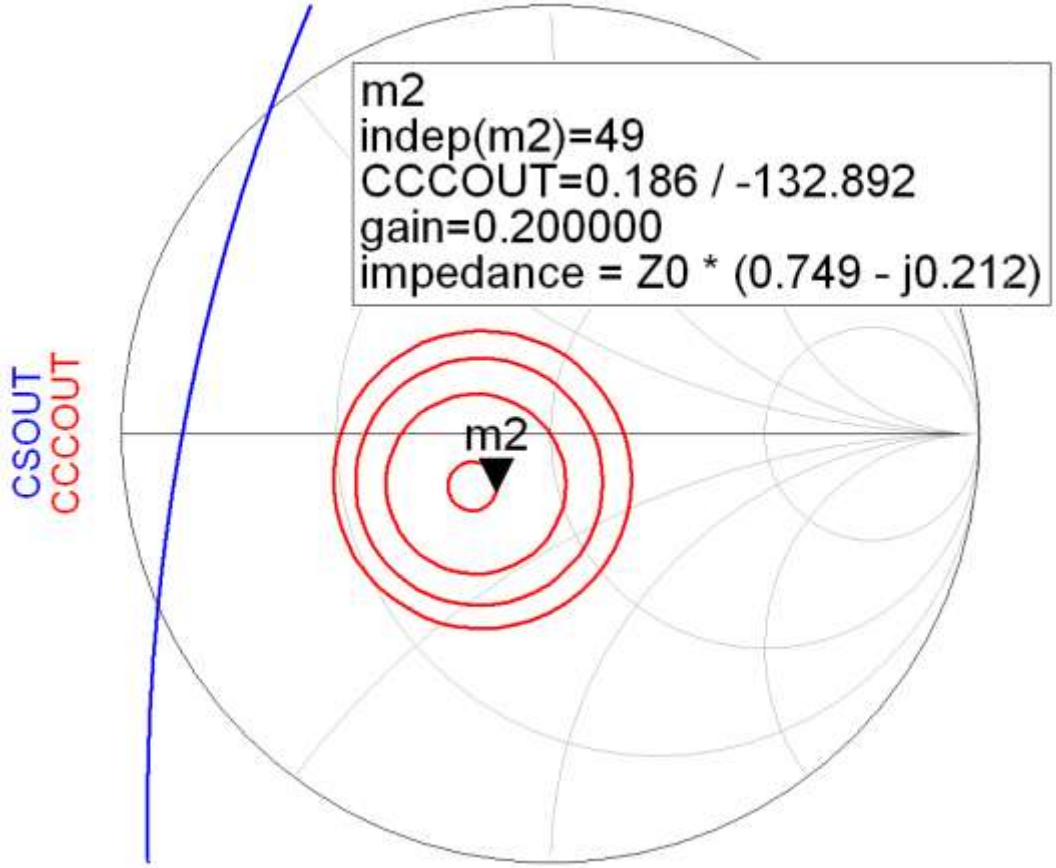

- CCCOUT: -0.4dB, -0.2dB, 0dB, +0.2dB
- Lipsa conditiilor privitoare la zgomot ofera posibilitatea obtinerii unui castig mai mare (spre maxim)

LNA

- De obicei un tranzistor potrivit pentru implementarea unui LNA la o anumita frecventa va avea cercurile de castig la intrare si cercurile de zgomot in aceeasi zona pentru Γ_S

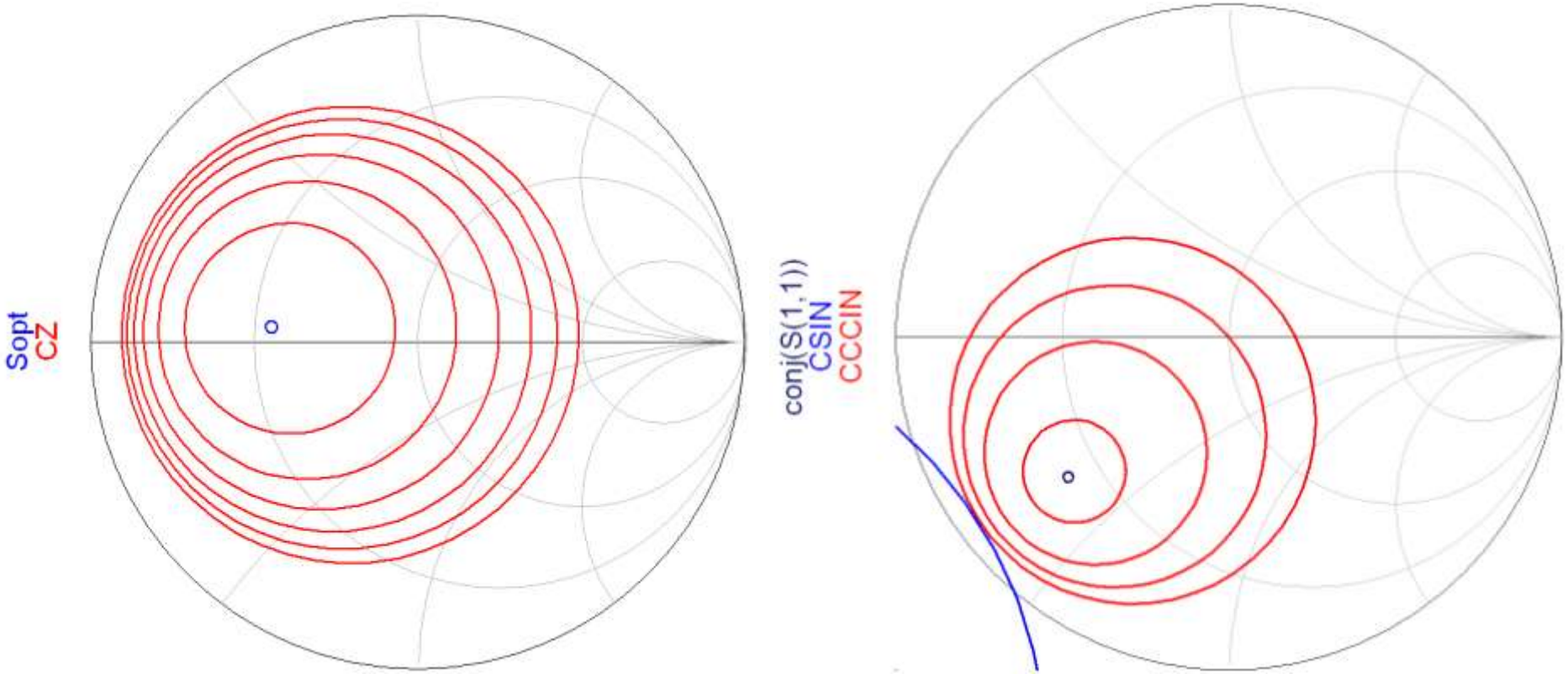

Contact

- Laboratorul de microunde si optoelectronica
- http://rf-opto.etti.tuiasi.ro
- rdamian@etti.tuiasi.ro